City of Coos Bay

Coos County, Oregon

CONTRACT DOCUMENTS

VOLUME 3 – Project Drawings

FOR THE CONSTRUCTION OF

Pump Station No. 4

SCHEDULE I: Pump Station No. 4 Replacement

SCHEDULE II: New Gravity Sewer Line and Force Main

August, 2011

City Project No. 09/10-002

Engineers Project No.1201-022

Prepared By:

Civil West Engineering Services, Inc.

486 E Street • Coos Bay, Oregon 97420 • Ph. 541.266.8601, Fax 541.266.8681 • www.civilwest.com

CITY OF COOS BAY

COOS COUNTY, OREGON

PUMP STATION 4 REPLACEMENT

CITY PROJECT NO.: 0910 002

2011

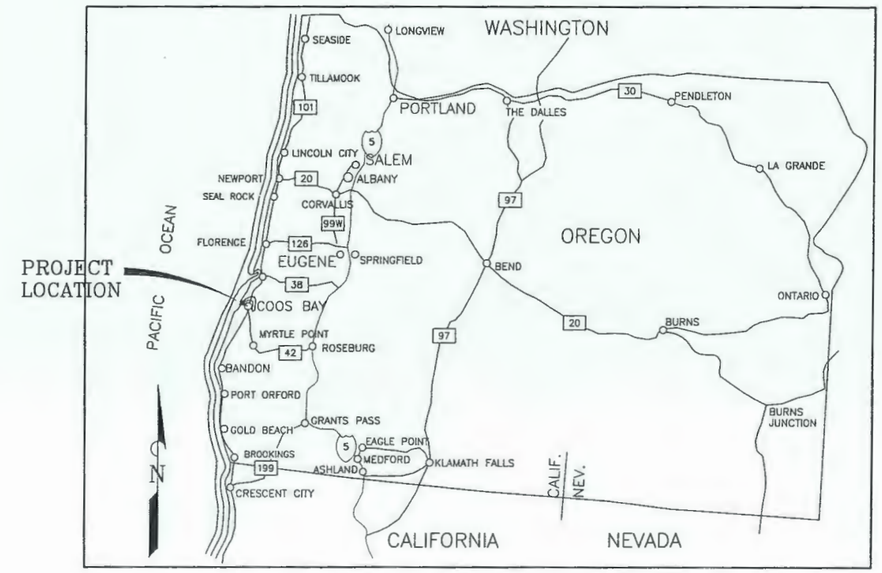

PAGE NUMBER	SHEET	SHEET TITLE
01	C0	COVER
02	C1	LEGEND & P&ID
03	C2	SITE PLAN EXPANDED AREA
04	C3	SITE FACILITIES PLAN
05	C4	DEMOLITION PLAN
06	C5	SITE GRADING
07	M1	WETWELL & VAULT ELEVATION
08	M2	HEADER & FLOWMETER
09	M3	WETWELL TOP
10	M4	WETWELL BASE
11	M5	GRAVITY MAIN PLAN & PROFILE
12	M6	FORCE MAIN PLAN & PROFILE
13	S1	BUILDING ELEVATIONS
14	S2	BUILDING SECTION
15	S3	STRUCTURE DETAILS
16	S4	STRUCTURE DETAILS CONTINUED
17	S5	RETAINING WALL
18	D1	STANDARD DETAILS TRENCHING
19	D2	STANDARD DETAILS MANHOLES
20	D3	BACKFLOW PREVENTER DETAILS
21	D4	STANDARD DETAILS MANHOLE BASE AND COVER
22	D5	STANDARD DETAILS CUT OFF WALL/WETWELL SENSOR TREE
23	D6	STANDARD DETAILS WETWELL PANEL/AIR RELEASE VALVE
24	E1	ONE-LINE DIAGRAM
25	E2	ELECTRICAL CONDUIT
26	E3	ELECTRICAL CONTROLS CONDUIT
27	E4	ELECTRICAL DISTRIBUTION PANELS
28	E5	CONTROLS SCHEMATIC

REGISTERED PROFESSIONAL ENGINEER
56560PE
OREGON
JULY 9, 2001
JAMES G. PALLO
EXPIRATION DATE: 12/31/12

Civil West Engineering Services, Inc.
486 E Street
Coos Bay, Oregon 97420
541-266-8601
www.civilwest.com

REV.	DATE	DESCRIPTION	BY

Designed By: JBH
Drawn By: JBH
Checked By: JGP
File: BASE MAP
Project No: 1202-022

CITY OF COOS BAY
500 CENTRAL AVENUE

PUMP STATION NO. 4
REPLACEMENT

TITLE SHEET

Sheet No: C0
Date: 5/29/2011
1 of 28

WATERLINE
STORM SEWER
NEW FORCE MAIN
NEW SANITARY SEWER
NEW FENCE
RIGHT OF WAY BORDER
TEMPORARY CONSTRUCTION EASEMENT
PERMANENT UTILITY EASEMENT
EXISTING RETAINING WALL
NEW RETAINING WALL
EXISTING FORCE MAIN
EXISTING SANITARY SEWER
STREAM
CONTOUR INTERVAL
GRAVEL ROAD EDGE
NEW ELECTRIC UTILITY

GRANULAR CRUSHED ROCK MATERIAL
DRAIN ROCK
WOOD
ASPHALT OR CONCRETE
NATIVE OR SUITABLE FILL DIRT
SAND OR FINE CEMENTIOUS MATERIAL

DETAIL REFERENCE NUMBER
DETAIL NAME
1 / M1 DETAIL
SCALE: 1" = X"
SCALE (IF USED)
DRAWING PAGE DETAIL NUMBER

NOTES:
ELEVATIONS IN THIS DRAWING ARE USING MLLW DATUM FROM SURVEY.

CITY OF COOS BAY BENCHMARK AT SW CORNER OF ANDERSON AND 10TH ST. PUBLISHED ELEVATION = 24.51, ADJUSTED ELEVATION USED = 24.96

ATTENTION: Oregon law requires you to follow rules adopted by the Oregon Utility Notification Center. Those rules are set forth in OAR 952-001-0010 through 952-0010090. You may obtain copies of the rules by calling the center. (note the telephone number for the Oregon Utility Notification Center is (503) 232-1987).

EXISTING AC SURFACE
EXISTING MANHOLE
EXISTING BUILDING
NEW MANHOLE
EXISTING WATER SERVICE CONNECTION
MECHANICAL SWITCH OR DRY CONTACT
FLOWMETER
NORMALLY OPEN RELAY
PUMP (20HP)
NORMALLY CLOSED RELAY
CHECK VALVE
DIAMETER INCREASE
FLOAT SWITCH (NORMALLY CLOSED)
VALVE
PRESSURE GAGE
DUPLEX RECEPTACLE
RELAY COIL LEG
2-WAY SWITCH

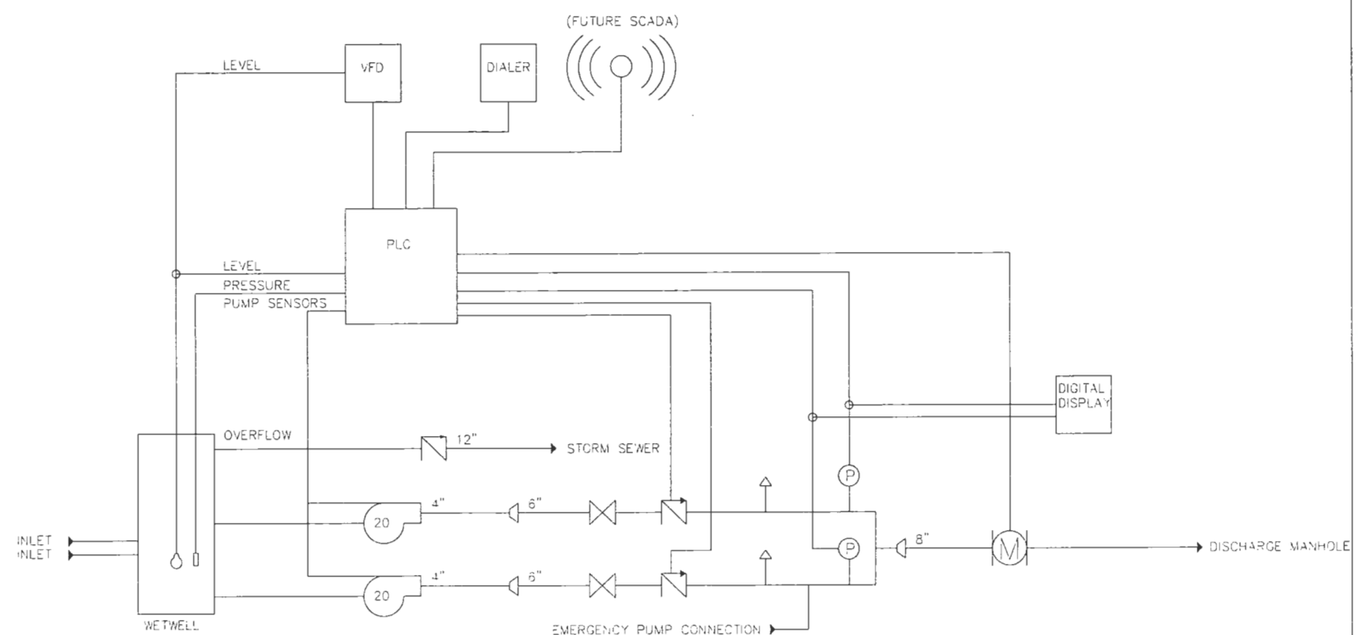

1 / C1 PROCESS & INSTRUMENTATION DIAGRAM

REGISTERED PROFESSIONAL ENGINEER 58560PE OREGON JULY 9, 2009 JAMES G. PALLO
EXPIRATION DATE: 12/31/12

Civil West Engineering Services, Inc.
486 E Street
Coos Bay, Oregon 97420
541-266-8601
www.civilwest.com

REV.	DATE	DESCRIPTION	BY

Designed By JBH | Drawn By JBH | Checked By JGP
File BASE MAP | Project Nu 1202-022

CITY OF COOS BAY
500 CENTRAL AVENUE

PUMP STATION NO. 4
REPLACEMENT

LEGEND + P+ID

Sheet No. C1
Date 5/29/2011
2 of 28

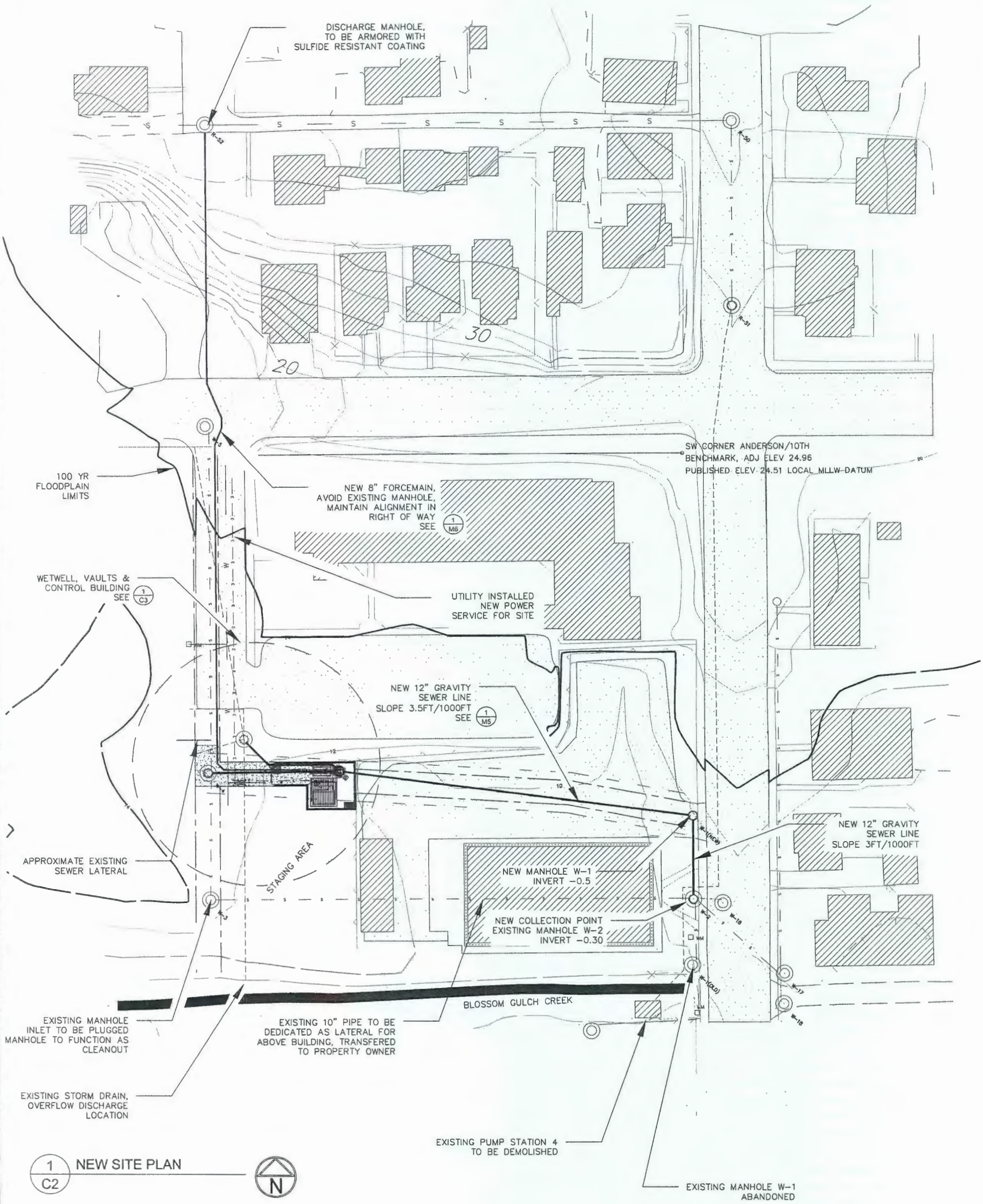

Date	Sheet No
5/29/2011	C2
3 OF 28	

CITY OF COOS BAY
500 CENTRAL AVE

PUMP STATION NO. 4 REPLACEMENT

SITE PLAN EXPANDED AREA

REV.	DATE	DESCRIPTION	BY

Designed By: JBH	Drawn By: JBH	Checked By: JGP
File: BASE MAP		Project No: 1202-022

Civil West Engineering Services, Inc.
486 E Street
Coos Bay, Oregon 97420
541-266-8601
www.civilwest.com

EXPIRATION DATE: 12/31/12

REGISTERED PROFESSIONAL ENGINEER
JAMES G. PALLO
OREGON
JULY 9, 2001
56560PE

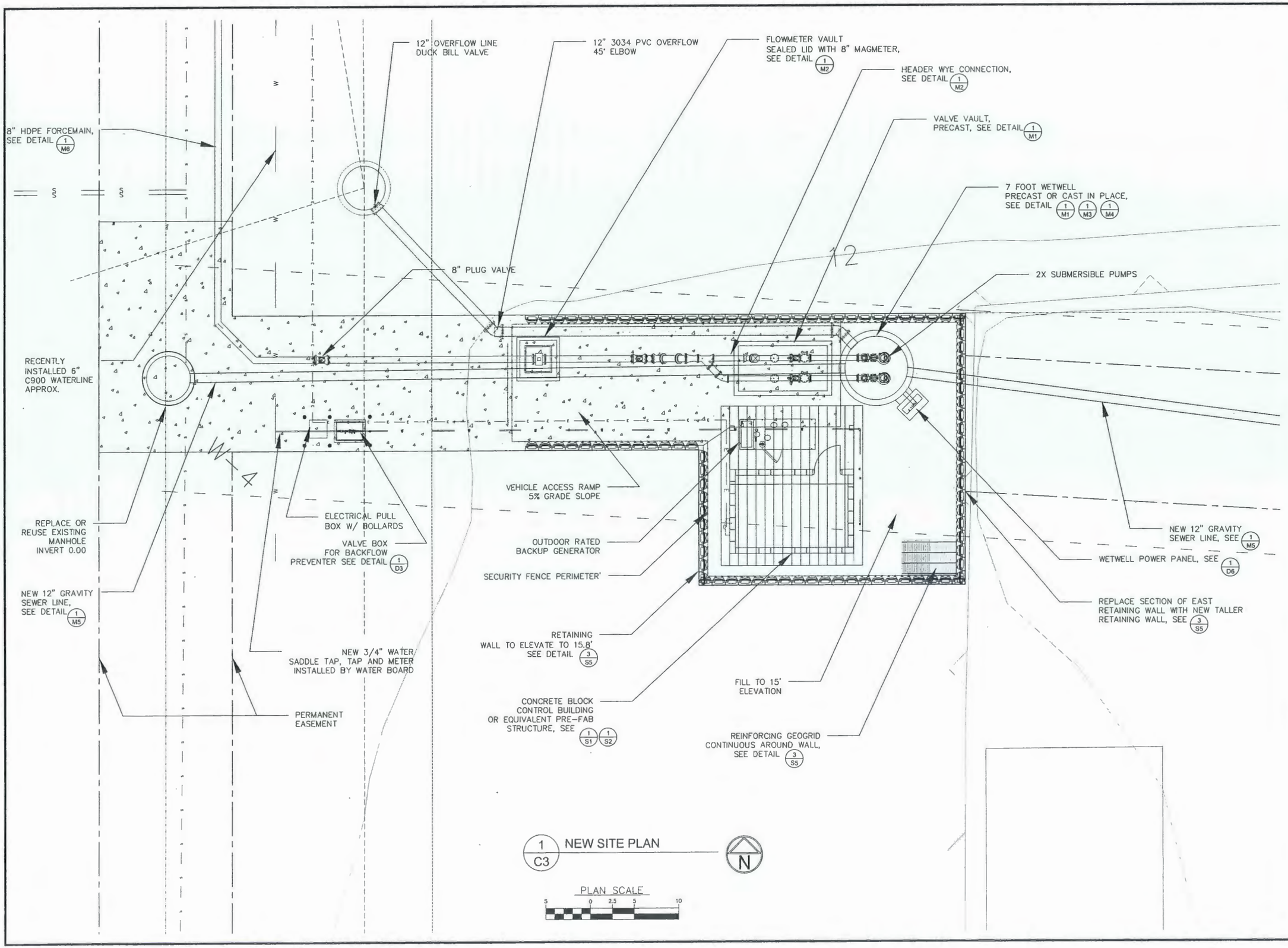

REGISTERED PROFESSIONAL ENGINEER
56560PE
OREGON
JULY 9, 2001
JAMES G. PALLO

EXPIRATION DATE: 12/31/12

Civil West Engineering Services, Inc.
486 E Street
Coos Bay, Oregon 97420
541-266-8601
www.civilwest.com

REV.	DATE	DESCRIPTION	BY

Designed By: JBH
Drawn By: JBH
Checked By: JGP
File: BASE MAP
Project No: 1202-022

CITY OF COOS BAY
500 CENTRAL AVENUE

PUMP STATION NO. 4
REPLACEMENT

SITE FACILITIES PLAN

Sheet No: C3
Date: 5/29/2011

1. EXISTING FORCEMAIN, ABANDON AND SLURRY FILL UPON STARTUP OF NEW PUMP STATION
2. EXISTING 16" DISCHARGE, PERMANENTLY PLUG
3. 16" PIPE, ABANDON AND SLURRY FILL AT COMPLETION
4. EXISTING MANHOLE, FILL AND PLUG INLET, OUTLET TO BECOME CLEANOUT ACCESS
5. WEST INFLUENT PIPE LOCATED BENEATH EXISTING STRUCTURE, TRANSFER TO PROPERTY OWNER FOR USE AS A LATERAL
6. TEMPORARY CONSTRUCTION EASEMENT, 30-FEET WIDE
7. PERMANENT UTILITY LINE EASEMENT, 15-FEET WIDE
8. EXISTING RETAINING WALL, REMOVE AND REPLACE WITH NEW SITE RETAINING WALL WITHIN CONSTRUCTION LIMITS PRIOR TO CONSTRUCTION OF PUMP STATION SITE
9. 12" EXISTING SEWER LINE BETWEEN W-3 AND W-4, ABANDON AND SLURRY FILL UPON COMPLETION
10. EXISTING DISCHARGE MANHOLE, PLUG INLET
11. EXISTING PUMP STATION TO BE DEMOLISHED AFTER CONSTRUCTION IS COMPLETE
    - A. PRESERVE CYCLONE FENCING
    - B. REMOVE ALL EXISTING STATION EQUIPMENT AND SCRAP TO CITY
    - C. REMOVE ALL BUILDING STRUCTURE ABOVE SLAB GRADE WHILE PREVENTING ANY DEBRIS OR DISTURBANCE OF CREEK BED AREA OR SALMON HABITAT. BUILDING WALLS AND ROOF SHALL BE DISMANTLED
    - D. SMOOTH SLAB BASE OF DEMOLISHED BUILDING AND SLURRY FILL WETWELL FLUSH WITH CONCRETE SLAB.

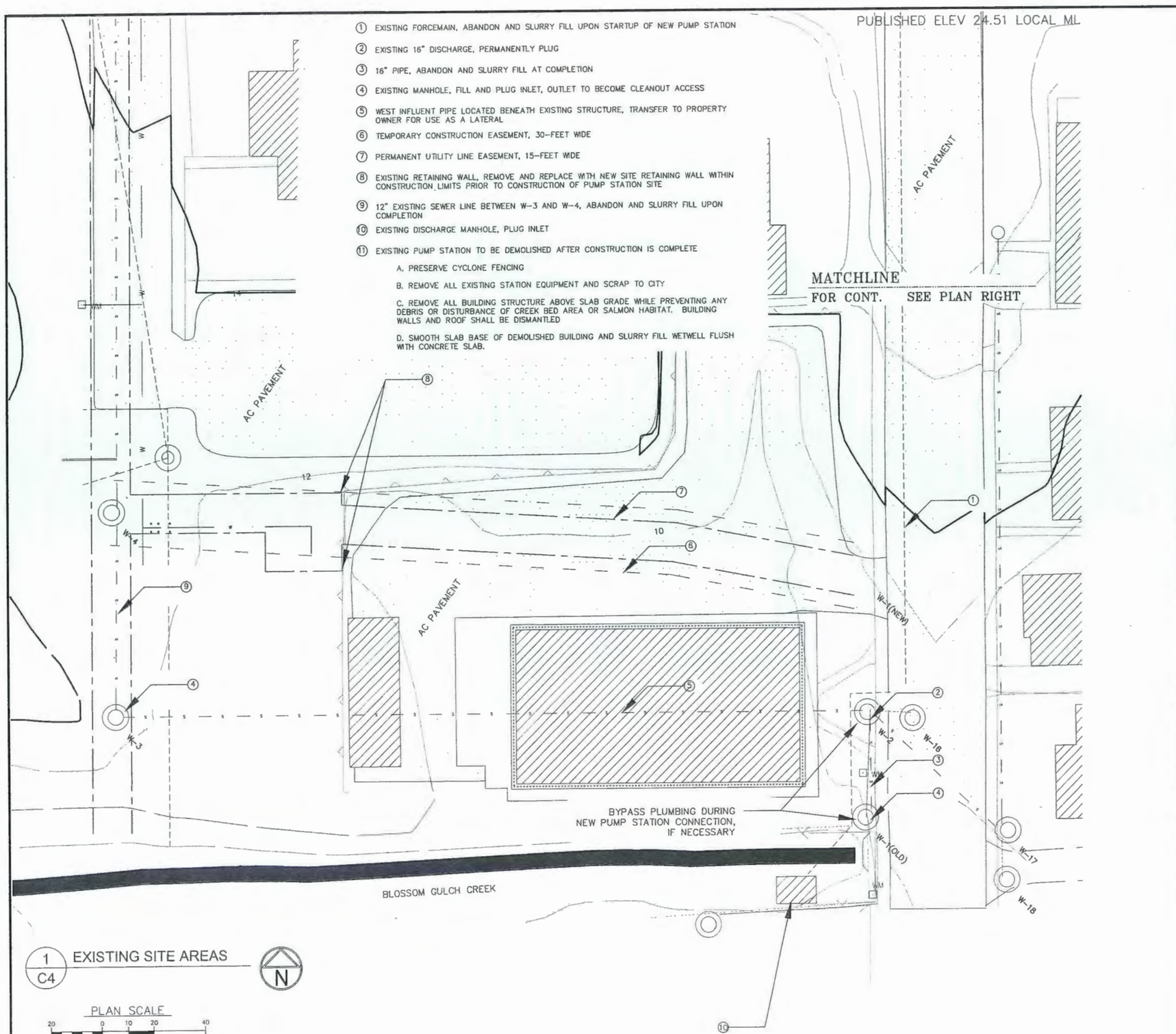

1 / C4 EXISTING SITE AREAS

PLAN SCALE 20 0 10 20 40

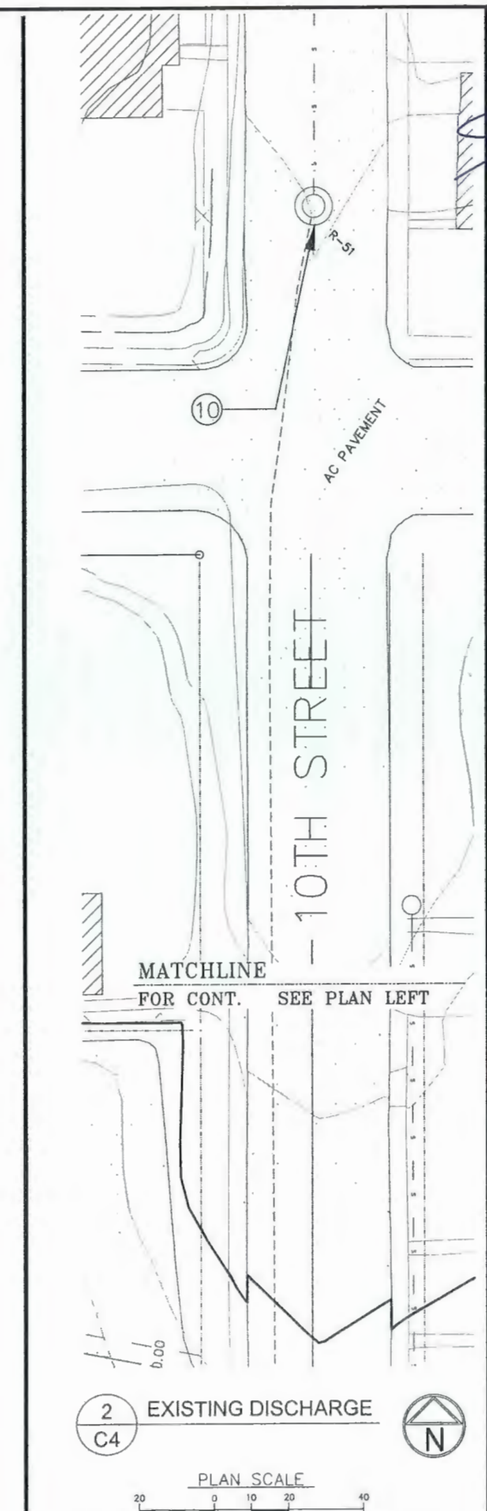

2 / C4 EXISTING DISCHARGE

PLAN SCALE 20 0 10 20 40

REGISTERED PROFESSIONAL ENGINEER 56860PE OREGON JULY 9, 2001 JAMES G. PALLO

EXPIRATION DATE: 12/31/12

Civil West Engineering Services, Inc.
541-266-8601
www.civilwest.com
486 E Street
Coos Bay, Oregon 97420

REV.	DATE	DESCRIPTION	BY

Designed By: JBH | Drawn By: JBH | Checked By: JGP
File: PS4 SITEPLAN | Project No: 1202-022

CITY OF COOS BAY
500 CENTRAL AVENUE

PUMP STATION NO. 4 REPLACEMENT

DEMOLITION PLAN

Sheet No. C4
Date 5/29/2011

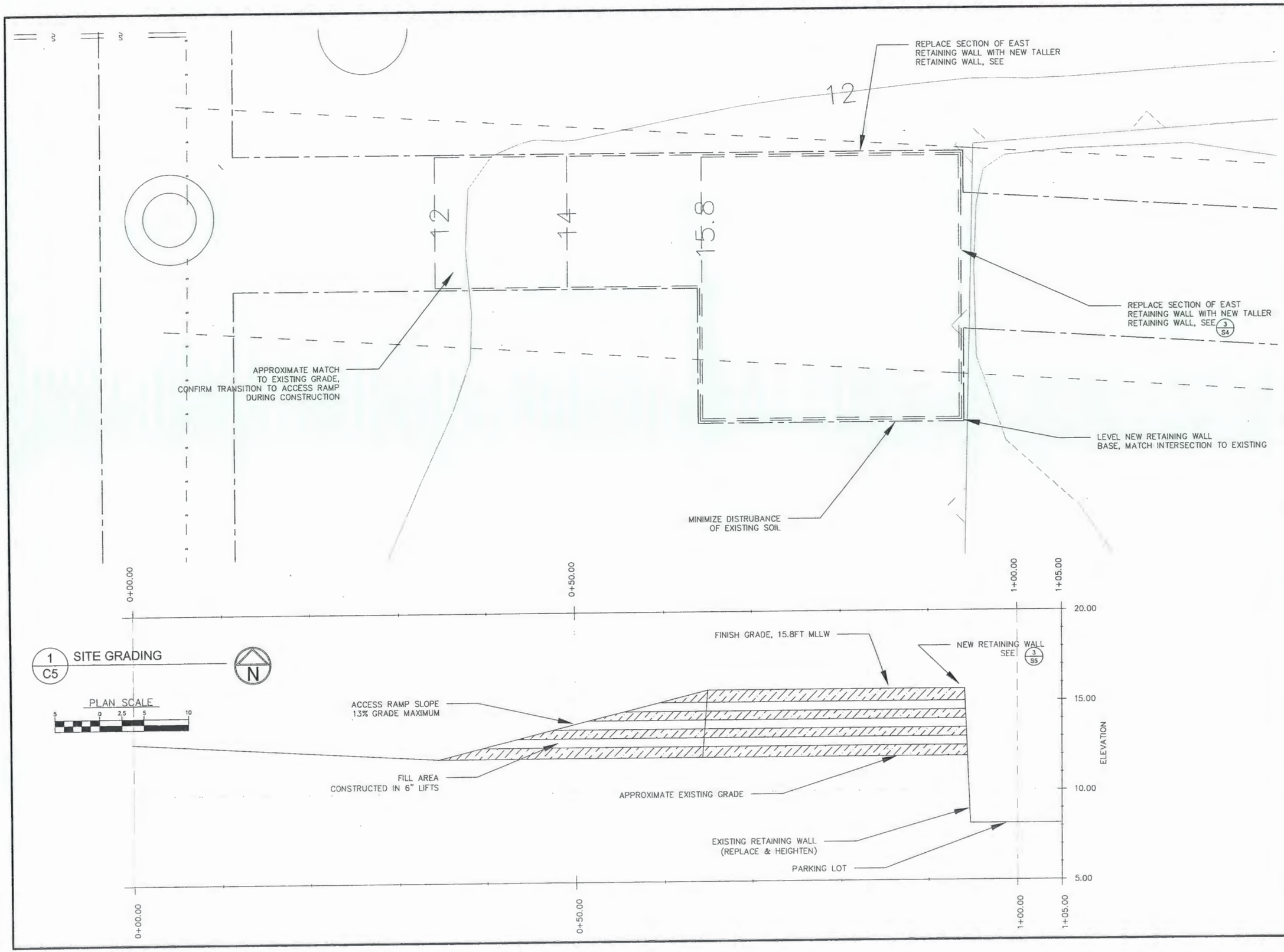

REGISTERED PROFESSIONAL ENGINEER
56560PE
OREGON
JULY 9, 2001
JAMES G. PALLO

EXPIRATION DATE: 12/31/12

Civil West Engineering Services, Inc.
486 E Street
Coos Bay, Oregon 97420
541-266-8601
www.civilwest.com

REV.	DATE	DESCRIPTION	BY

Designed By: JBH
Drawn By: JBH
Checked By: JGP
File: BASE MAP
Project No. 1202-022

CITY OF COOS BAY
500 CENTRAL AVENUE

PUMP STATION NO. 4
REPLACEMENT

SITE GRADING

Sheet No. C5
Date 5/29/2011

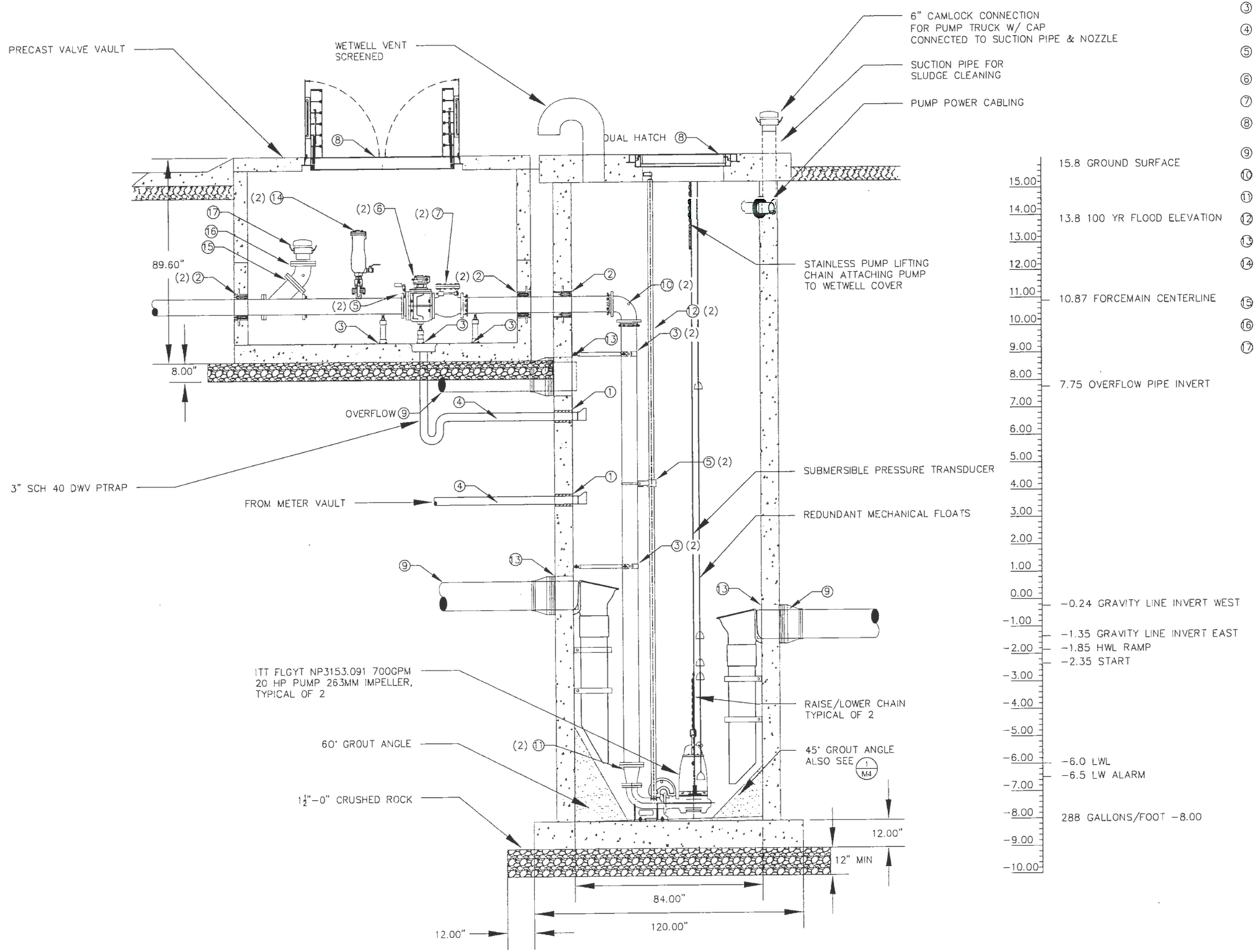

1/M1 WETWELL AND VAULT ELEVATION

PLAN SCALE 24" 0 12" 24" 48"

① GROUT PIPE PENETRATIONS
② LINK SEAL PIPE PENETRATIONS
③ PIPE SUPPORT BRACKET
④ 3" SCH 40 DRAIN W/FLAPPER
⑤ HORIZONTAL PRESSURE GAUGE W/ SHUTOFF BALL VALVE
⑥ 6" PLUG VALVE
⑦ 6" SWING CHECK VALVE
⑧ H20 HATCH COVER WITH SAFETY GRATE
⑨ 12" PVC 3034 SEWER PIPE
⑩ 6" FLANGED 90° ELBOW
⑪ 4" TO 6" REDUCER
⑫ PUMP GUIDE BARS
⑬ KOR-N-SEAL BOOT
⑭ COMBINATION AIR RELEASE VALVE, SEE 2/D6
⑮ 6" WYE FLANGE
⑯ 6" 45° BEND
⑰ 6" CAMLOCK FITTING FOR BYPASS PUMP CONNECTION

REGISTERED PROFESSIONAL ENGINEER 56360PE OREGON JULY 9, 2011 JAMES G. PALLO

EXPIRATION DATE: 12/31/12

Civil West Engineering Services, Inc.
486 E Street
Coos Bay, Oregon 97420
541-266-8601
www.civilwest.com

REV	DATE	DESCRIPTION	BY

Designed by: JBH
Drawn by: JBH
Checked by: JGP
File: PS4 SITEPLAN
Project No: 1202-022

CITY OF COOS BAY
500 CENTRAL AVENUE

PUMP STATION NO. 4 REPLACEMENT

WETWELL + VAULT ELEVATION

Sheet No: M1
Date: 5/29/2011

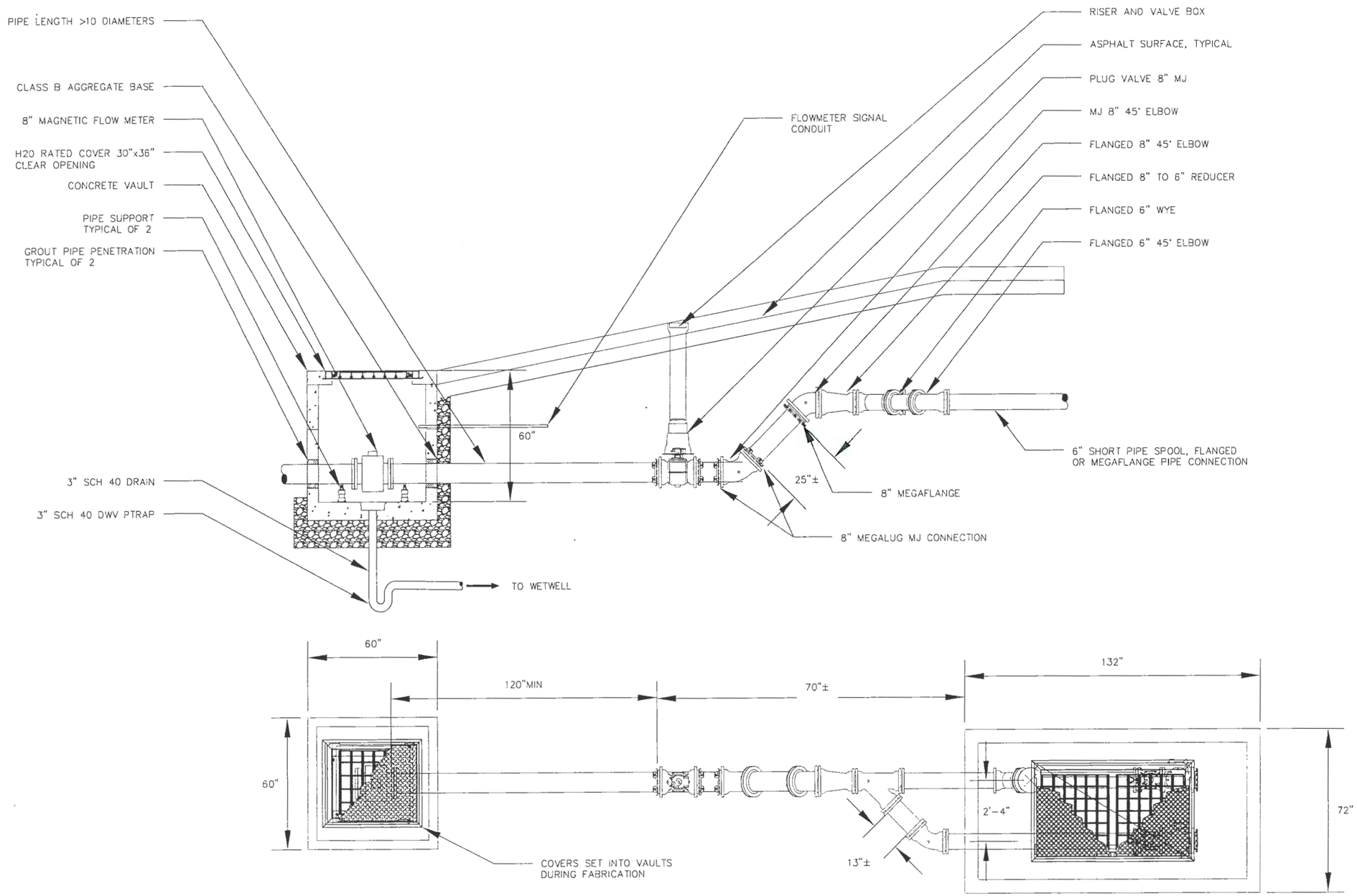

1 / M2 HEADER & FLOWMETER

PLAN SCALE

24" 0 12" 24" 48"

REGISTERED PROFESSIONAL ENGINEER
50360PE
OREGON
JULY 9, 2001
JAMES G. PALLO

EXPIRATION DATE: 12/31/12

Civil West Engineering Services, Inc.
486 E Street
Coos Bay, Oregon 97420
541-266-8601
www.civilwest.com

REV.	DATE	DESCRIPTION	BY

Designed By JBH | Drawn By JBH | Checked By JGP
File PS4 SITEPLAN | Project No. 1202-022

CITY OF COOS BAY
500 CENTRAL AVENUE

PUMP STATION NO. 4
REPLACEMENT

HEADER + FLOWMETER

Date 5/29/2011 | Sheet No. M2

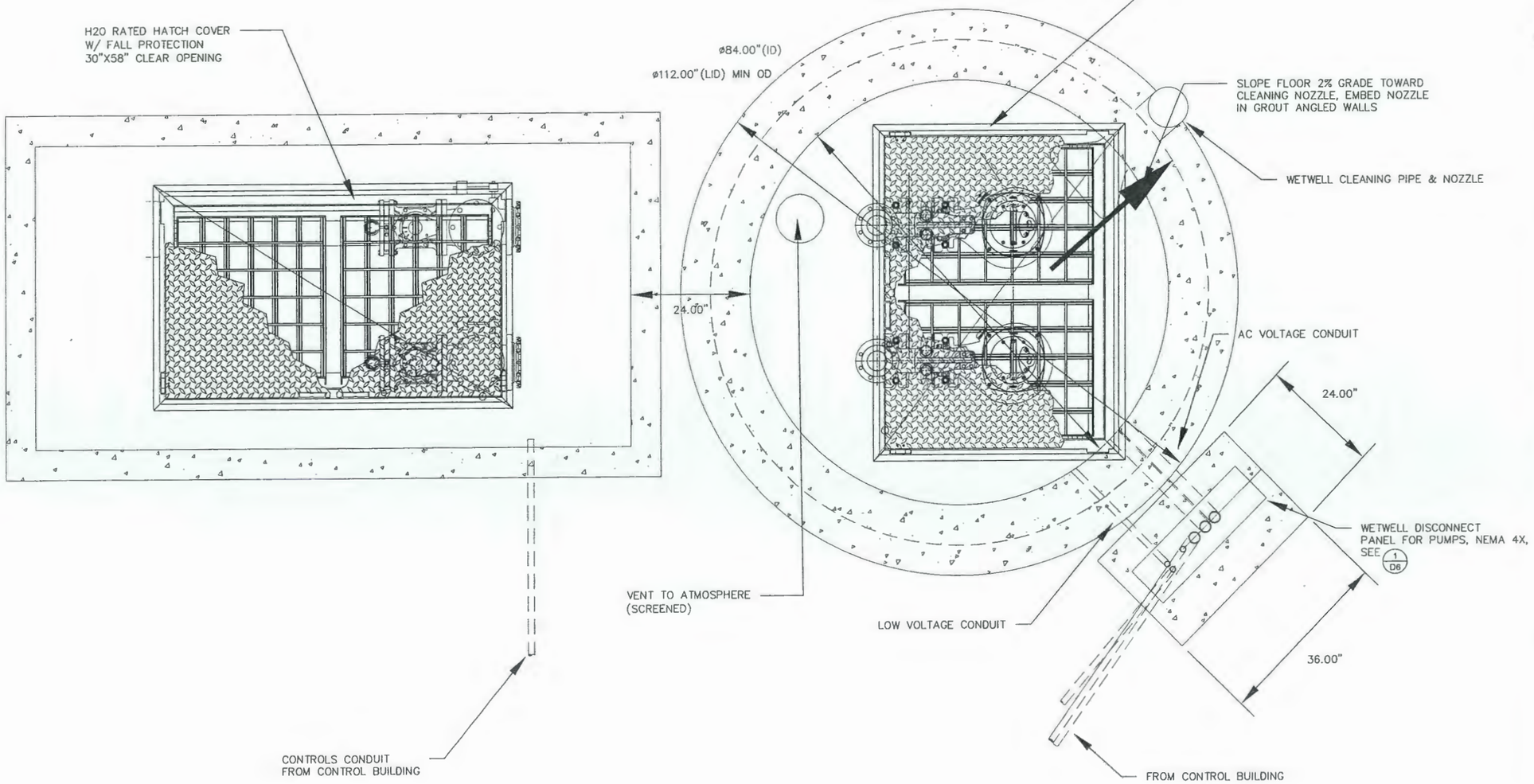

1/M3 WETWELL TOP

PLAN SCALE

12" 0 5" 12" 24"

REGISTERED PROFESSIONAL ENGINEER
56860PE
OREGON
JULY 9, 2001
JAMES G. PALLO

EXPIRATION DATE: 12/31/12

Civil West Engineering Services, Inc.
486 E Street
Coos Bay, Oregon 97420
541-266-8601
www.civilwest.com

REV.	DATE	DESCRIPTION	BY

Designed By: JBH
Drawn By: JBH
Checked By: JGP
File: PS4 SITEPLAN
Project No: 1202-022

CITY OF COOS BAY
500 CENTRAL AVENUE

REPLACEMENT
PUMP STATION NO. 4

WETWELL TOP

Sheet No: M3
Date: 5/29/2011

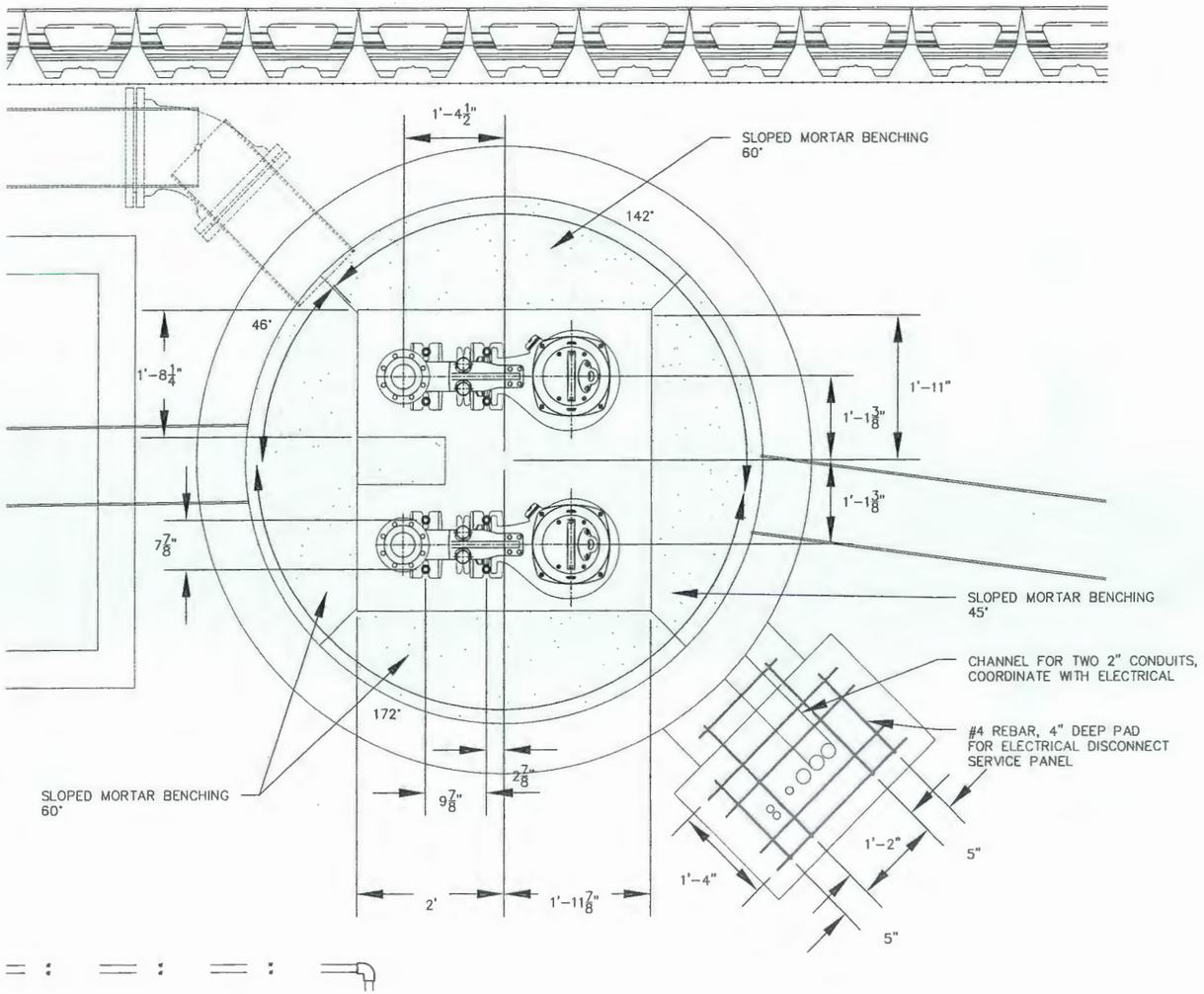

1 / M4 WETWELL BASE

PLAN SCALE

12" 0 6" 12" 24"

REGISTERED PROFESSIONAL ENGINEER
58560PE
OREGON
JULY 9, 2001
JAMES G. PALLO

EXPIRATION DATE: 12/31/12

Civil West Engineering Services, Inc.
486 E Street
Coos Bay, Oregon 97420
541-266-8601
www.civilwest.com

REV.	DATE	DESCRIPTION	BY

Designed By: JBH
Drawn By: JBH
Checked By: JGP
File: PS4 SITEPLAN
Project No: 1202-022

CITY OF COOS BAY
500 CENTRAL AVENUE

REPLACEMENT
PUMP STATION NO. 4

WETWELL BASE

Date: 5/29/2011
Sheet No: M4

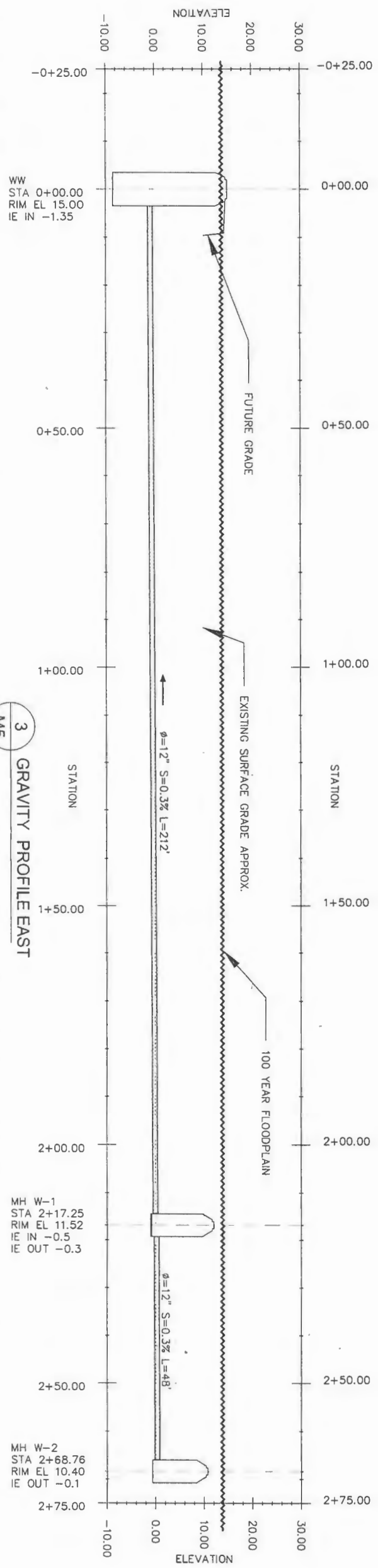

3 M5 GRAVITY PROFILE EAST

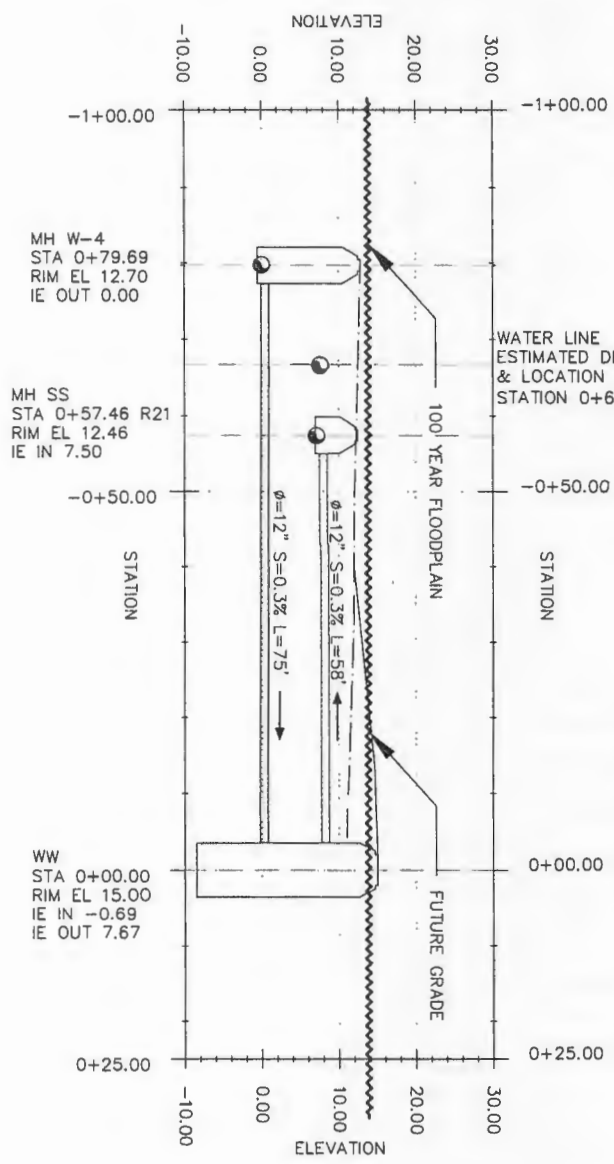

2 M5 GRAVITY PROFILE WEST

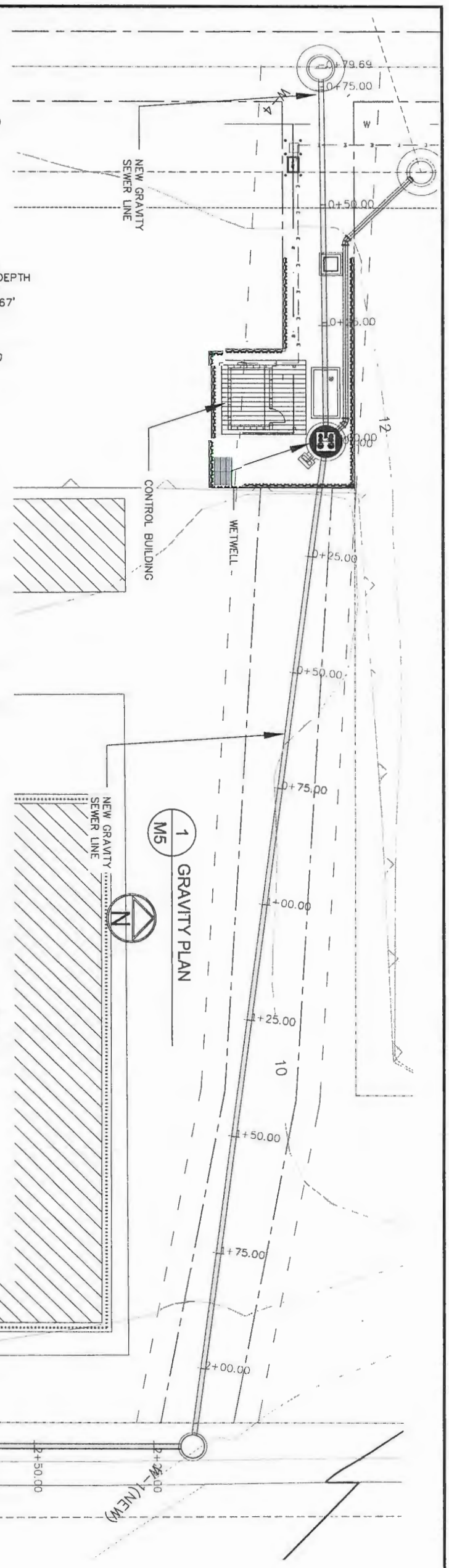

1 M5 GRAVITY PLAN

Date	Sheet No.
1/29/2011	M5
11 OF 28	

CITY OF COOS BAY
500 CENTRAL AVENUE

REPLACEMENT
PUMP STATION NO. 4

SCHEDULE II
GRAVITY MAIN PLAN + PROFILE

REV.	DATE	DESCRIPTION	BY

Designed By: JBH	Drawn By: JBH	Checked By: JGP
File: BASE MAP		Project No: 1202-022

Civil West Engineering Services, Inc.
486 E Street
Coos Bay, Oregon 97420
541-266-8601
www.civilwest.com

EXPIRATION DATE: 12/31/12

REGISTERED PROFESSIONAL ENGINEER
56560PE
OREGON
JULY 9, 2001
JAMES G. PALLO

1 / M6 FORCEMAIN PROFILE

PLAN SCALE

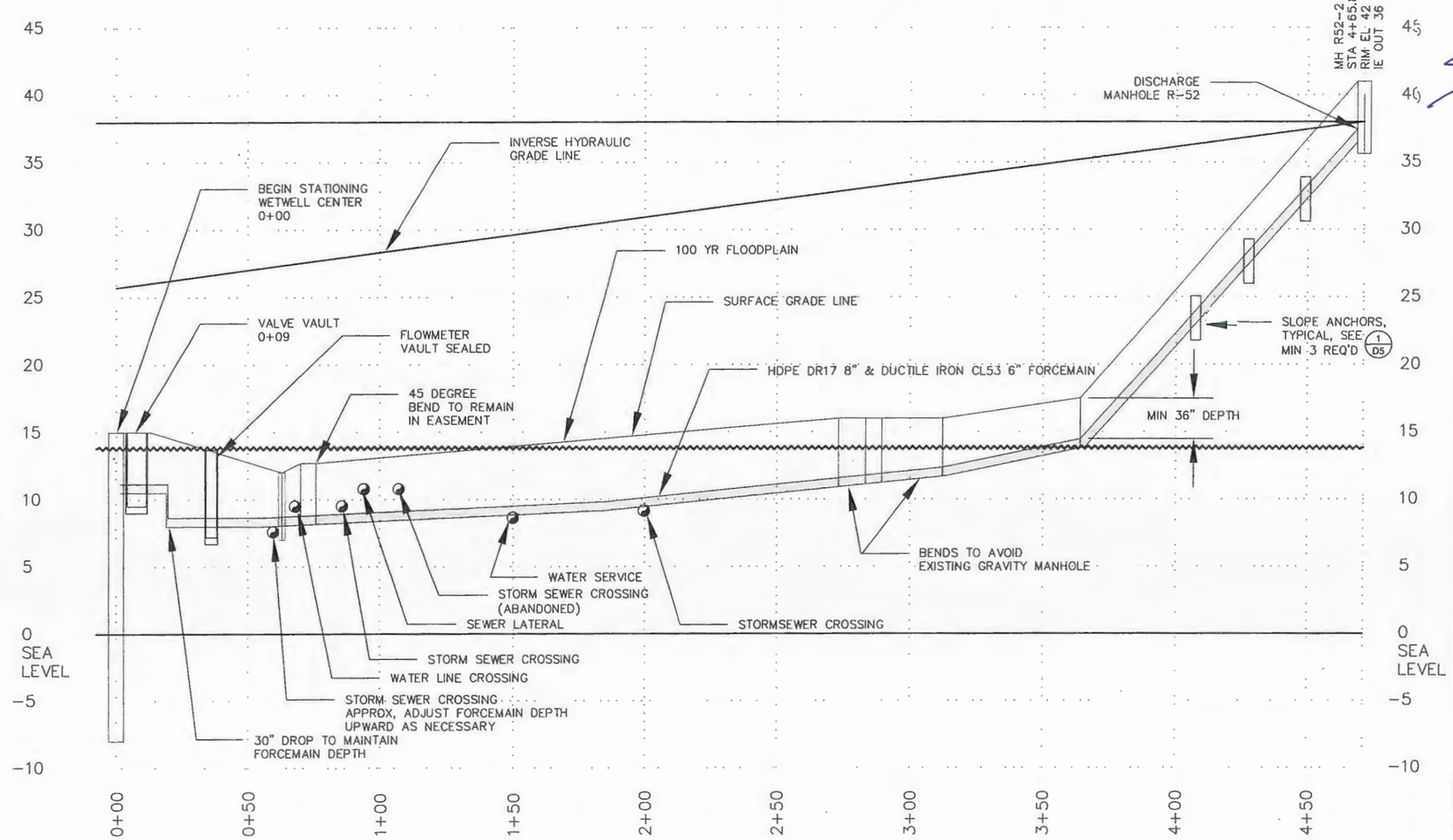

NOTES:
LOCATIONS AND DEPTH GIVEN FOR UTILITIES ARE A BEST APPROXIMATION AS FOUND IN SURVEY DATA AND CONSTRUCTION PLANS FOR NEARBY APARTMENTS. DEPTHS AND LOCATIONS SHOULD BE VERIFIED BY CONTRACTOR PRIOR TO PLACING PIPE.

ADJUSTMENTS TO FORCEMAIN GRADE MUST MAINTAIN MINIMUM BURIAL DEPTHS OF >36" AND CONTINUOUSLY RISE FROM THE LOWEST POINT TO PREVENT AIR ENTRAPMENT.

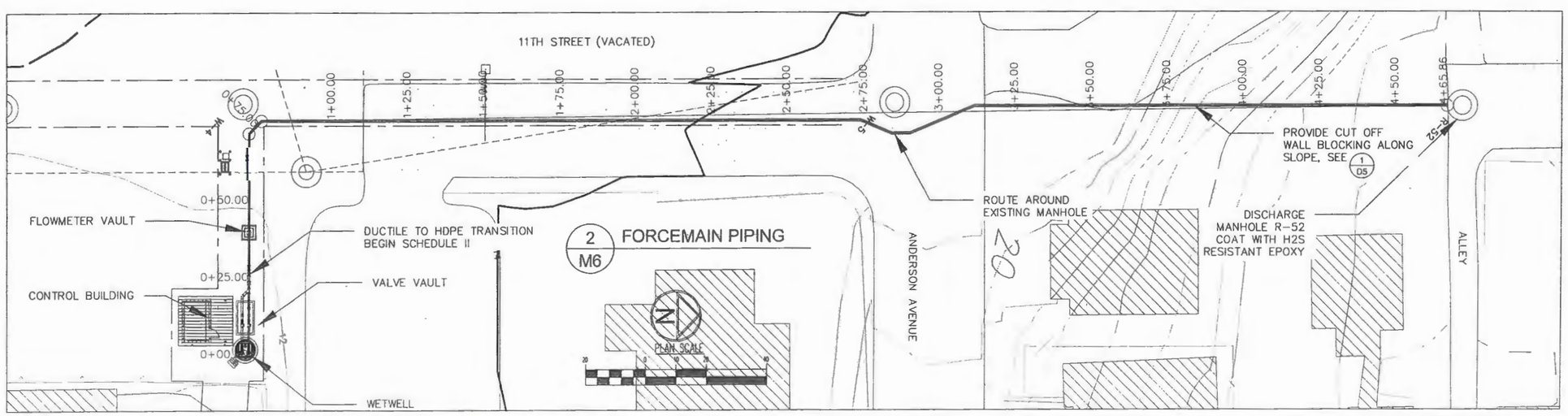

REGISTERED PROFESSIONAL ENGINEER
56560PE
OREGON
JULY 9, 2001
JAMES G. PALLA
EXPIRATION DATE: 12/31/12

Civil West Engineering Services, Inc.
486 E Street
Coos Bay, Oregon 97420
541-266-8601
www.civilwest.com

REV.	DATE	DESCRIPTION	BY

Designed By: JBH
Drawn By: JBH
Checked By: JGP
File: PS4 SITEPLAN
Project No: 1202-022

CITY OF COOS BAY
500 CENTRAL AVENUE

PJMP STATION NO. 4 REPLACEMENT

SCHEDULE II
FORCEMAIN PLAN + PROFILE

Sheet No. M6
Date 5/29/2011
12 OF 28

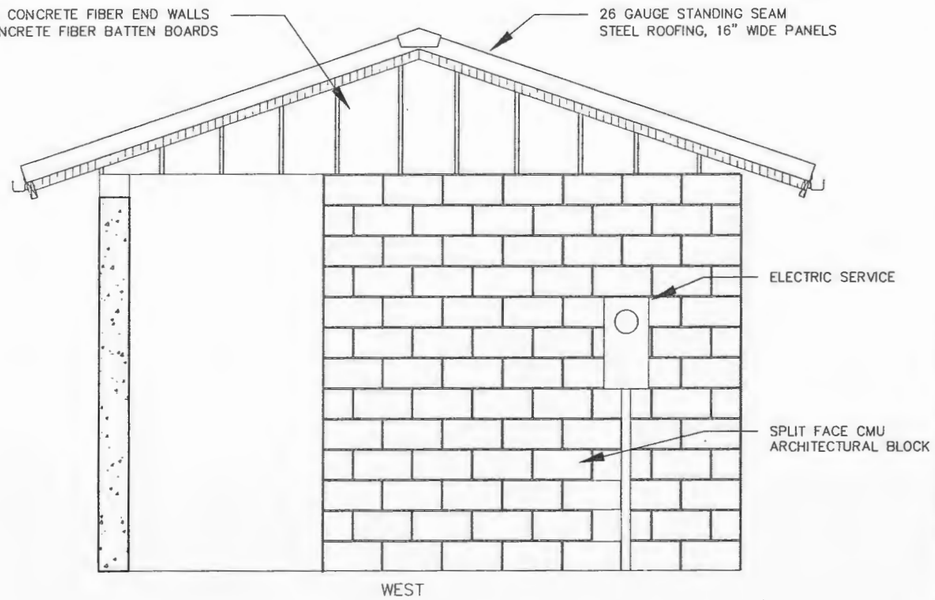

1 / S1 WEST ELEVATION
SCALE: 1" = 40"

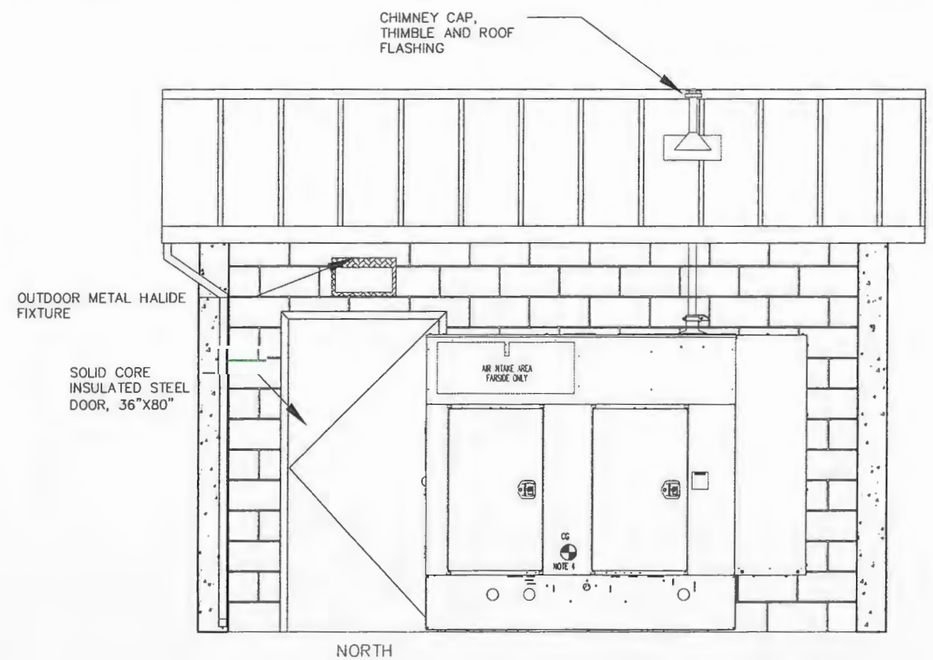

1 / S2 NORTH ELEVATION
SCALE: 1" = 40"

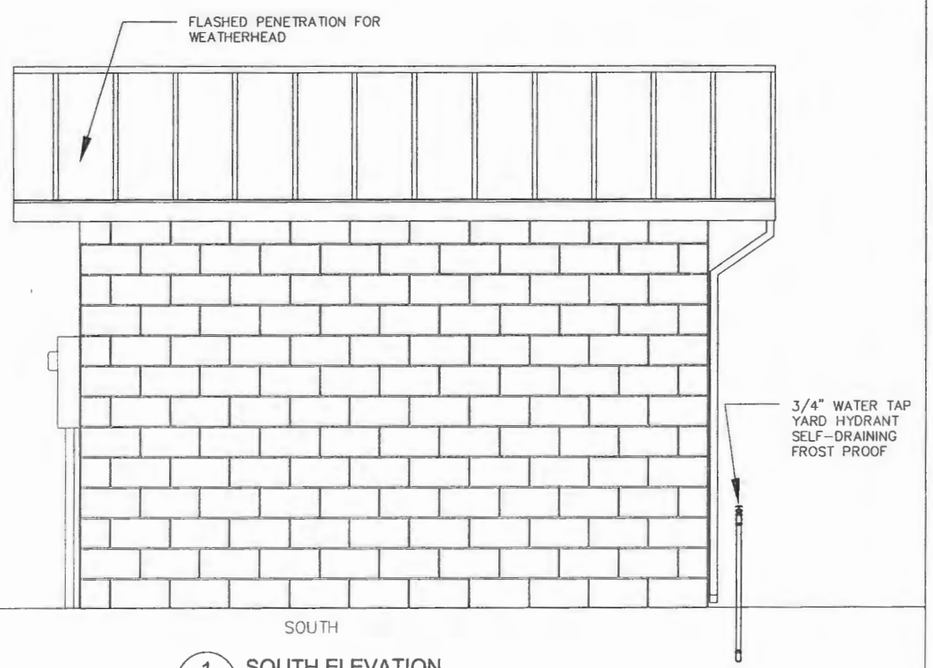

1 / S3 SOUTH ELEVATION
SCALE: 1" = 40"

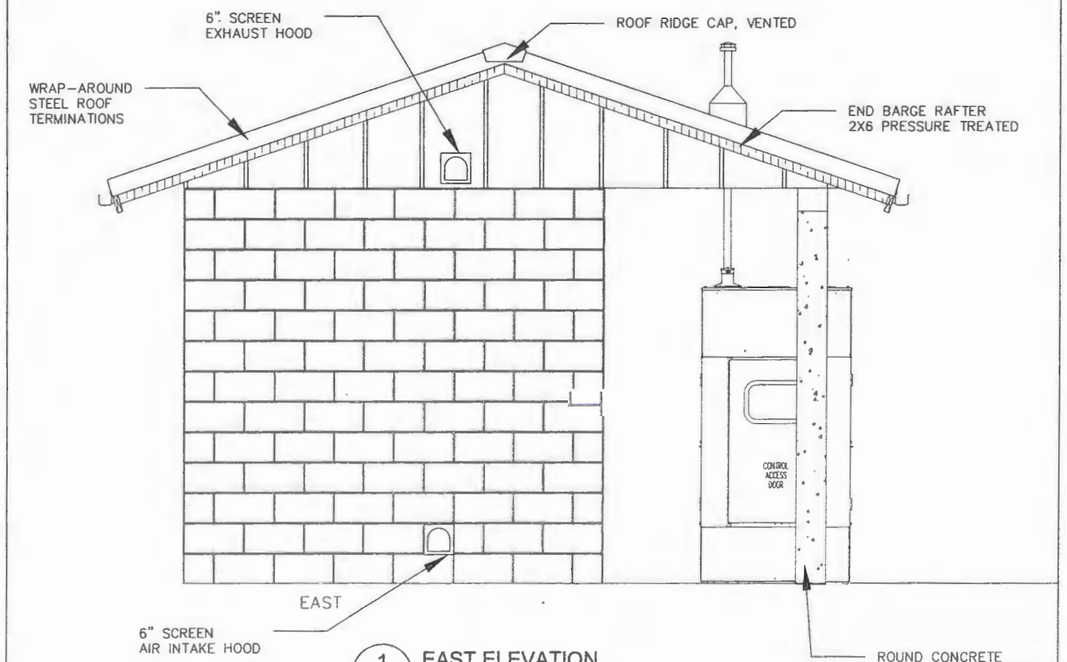

1 / S4 EAST ELEVATION
SCALE: 1" = 40"

REGISTERED PROFESSIONAL ENGINEER
50560PE
OREGON
JULY 9, 2001
JAMES G. PALLO
EXPIRATION DATE: 12/31/12

Civil West Engineering Services, Inc.
486 E Street
Coos Bay, Oregon 97420
541-266-8601
www.civilwest.com

REV.	DATE	DESCRIPTION	BY

Designed By: JBH
Drawn By: JBH
Checked By: JGP
File: BASE MAP
Project No: 1202-022

CITY OF COOS BAY
500 CENTRAL AVENUE

PUMP STATION NO. 4
REPLACEMENT

BUILDING ELEVATIONS

Date: 1/29/2011
Sheet No: S1

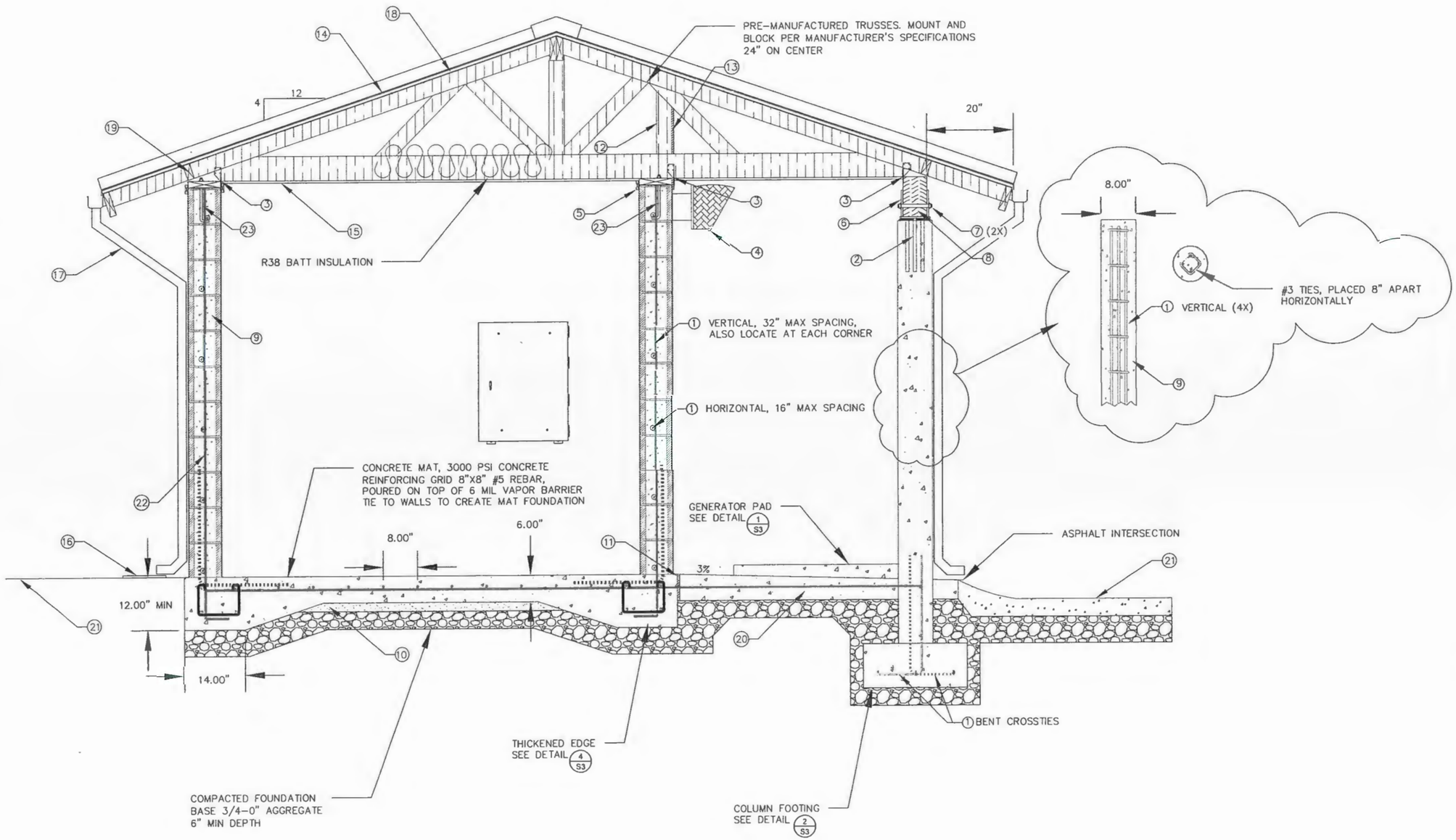

① #5 REINFORCING BAR
② #4 ANCHORS ON SIMPSON HGLB TIE
③ HURRICANE TIES, ALL TRUSSES SIMPSON H3
④ OUTDOOR LIGHT
⑤ 1" TRIM PLATE
⑥ SIMPSON HGLBB BEAM SEAT
⑦ ¾" TIE BOLTS
⑧ GRADE #1 DOUG FIR 6"X10"
⑨ FILL COLUMN 2500 PSI CONCRETE
⑩ CLEAN SAND FILL, 2" DEPTH
⑪ EXPANSION/CONTRACTION JOINT FILLER
⑫ 2X4 OUTSIDE WALL
⑬ ½" PLYWOOD OR OSB
⑭ 30LB ROOFING FELT
⑮ ½" HARDIBACKER OR EQUIVALENT
⑯ DOWNSPOUT SPLASH GUARD
⑰ GUTTER AND DOWNSPOUT, TYPICAL 1 PER EAVE
⑱ ⅝" PLYWOOD SHEATHING
⑲ 2X4 EAVE BLOCKING, W/ SCREENED AND VENTED HOLE
⑳ OUTSIDE SLAB, 3000 PSI CONCRETE, 8"X8" #4 REBAR GRID USE #4 REBAR TO DOWEL SLABS AND COLUMNS TOGETHER
㉑ SLOPE GROUND AWAY FROM BUILDING 5% GRADE
㉒ BOND ONE #4 REBAR FOR ELECTRICAL GROUND
㉓ ⅝" J-ANCHOR BOLT

NOTE:

ADD #5 REINFORCING BAR AROUND ALL CMU BLOCK OPENINGS

1/S2 BUILDING SECTION
SCALE: 1" = 25"

REGISTERED PROFESSIONAL ENGINEER 56560PE OREGON JULY 9, 2001 JAMES G. PALLO

EXPIRATION DATE: 12/31/12

Civil West Engineering Services, Inc.
486 E Street
Coos Bay, Oregon 97420
541-266-8601
www.civilwest.com

REV.	DATE	DESCRIPTION	BY

Designed By: JBH
Drawn By: JBH
Checked By: JGP
File: BASE MAP
Project No: 1202-022

CITY OF COOS BAY
500 CENTRAL AVENUE

PUMP STATION NO. 4 REPLACEMENT

BUILDING SECTION

Sheet No. S2
Date 1/29/2011
14 OF 28

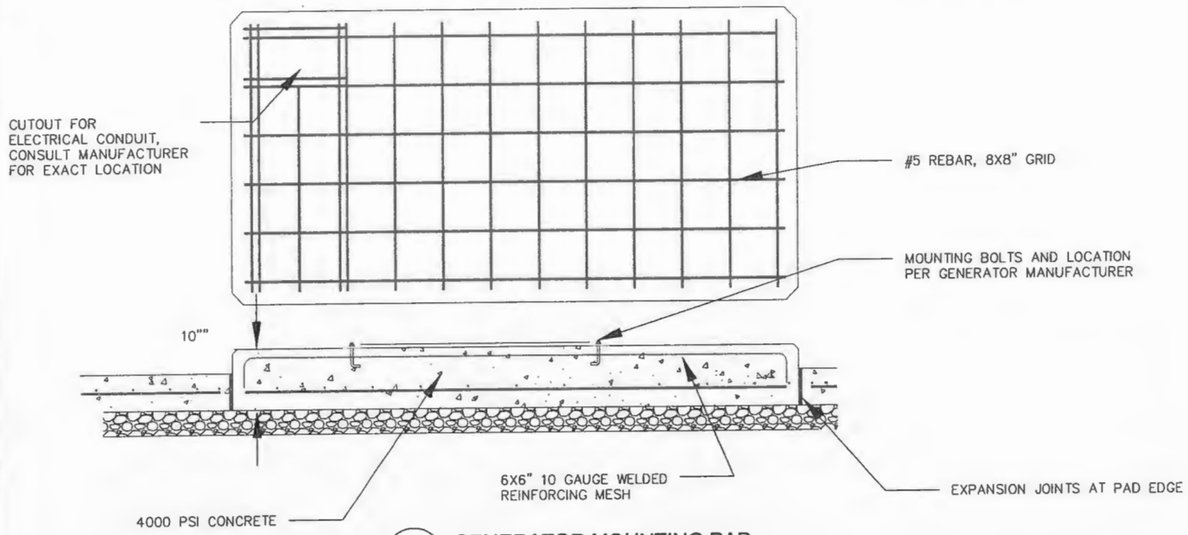

1 / S3 GENERATOR MOUNTING PAD
SCALE: 1" = 25"

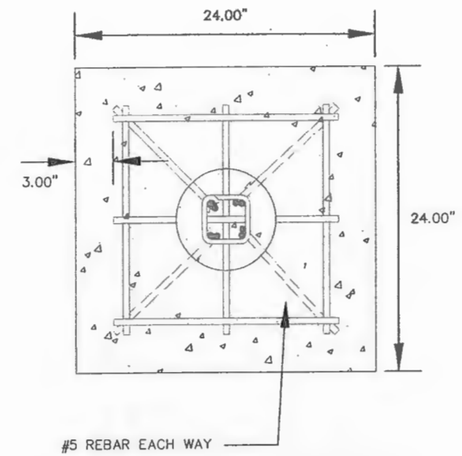

2 / S3 COLUMN FOOTING DETAILS
SCALE: 1" = 1'

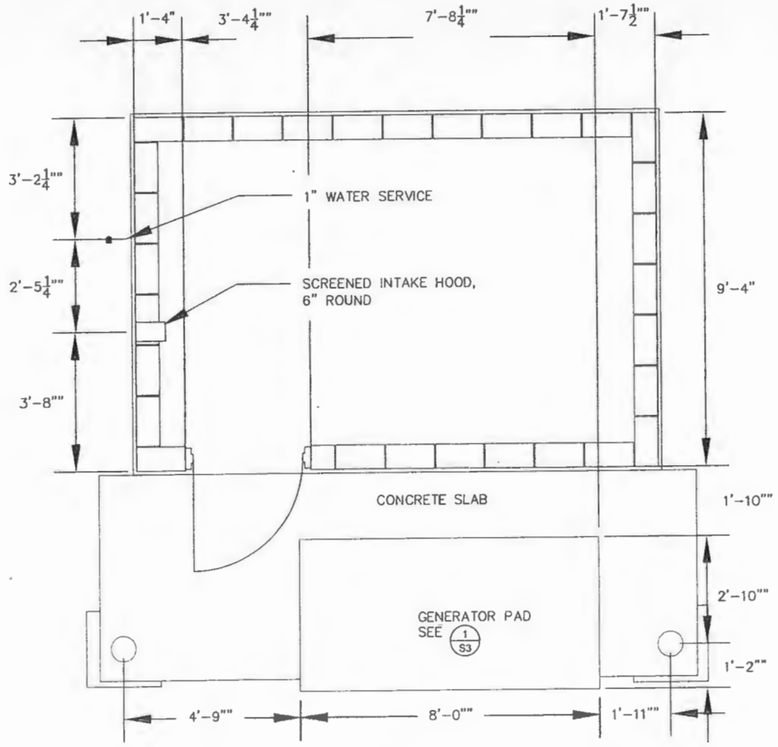

3 / S3 FOOTING PLAN DETAILS
SCALE: 1" = 4'

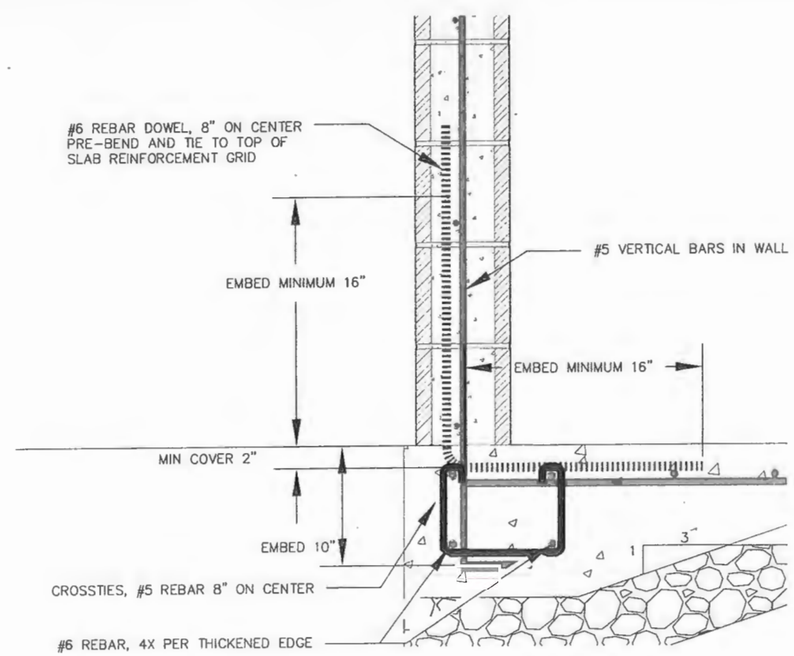

4 / S3 THICKENED EDGE DETAIL
SCALE: 1" = 1'

REGISTERED PROFESSIONAL ENGINEER
50560PE
OREGON
JULY 9, 2001
JAMES G. PALIO
EXPIRATION DATE: 12/31/12

Civil West Engineering Services, Inc.
486 E Street
Coos Bay, Oregon 97420
541-266-8601
www.civilwest.com

REV.	DATE	DESCRIPTION	BY

Designed By: JBH
Drawn By: JBH
Checked By: JGP
File: BASE MAP
Project No: 1202-022

CITY OF COOS BAY
500 CENTRAL AVENUE

PUMP STATION NO. 4
REPLACEMENT

STRUCTURE DETAILS

Date: 5/29/2011
Sheet No.: S3

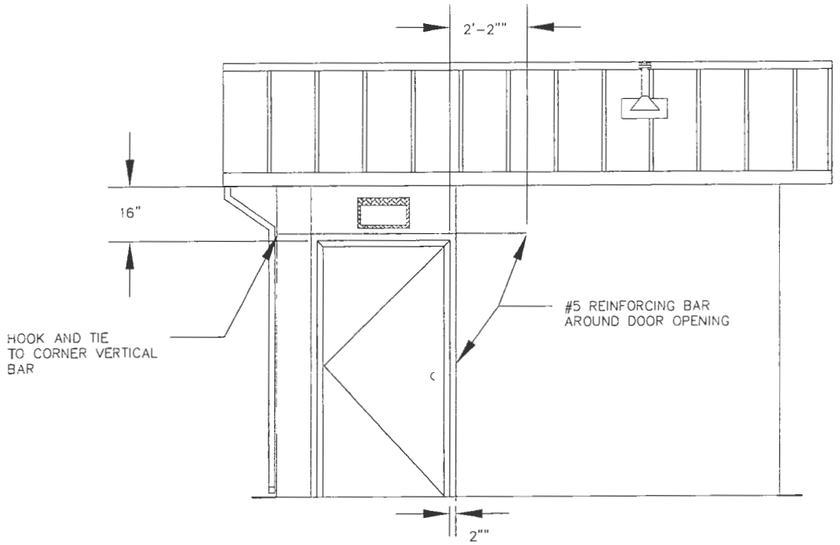

1 / S4 DOOR LINTEL REINFORCEMENT
SCALE: 1" = 50"

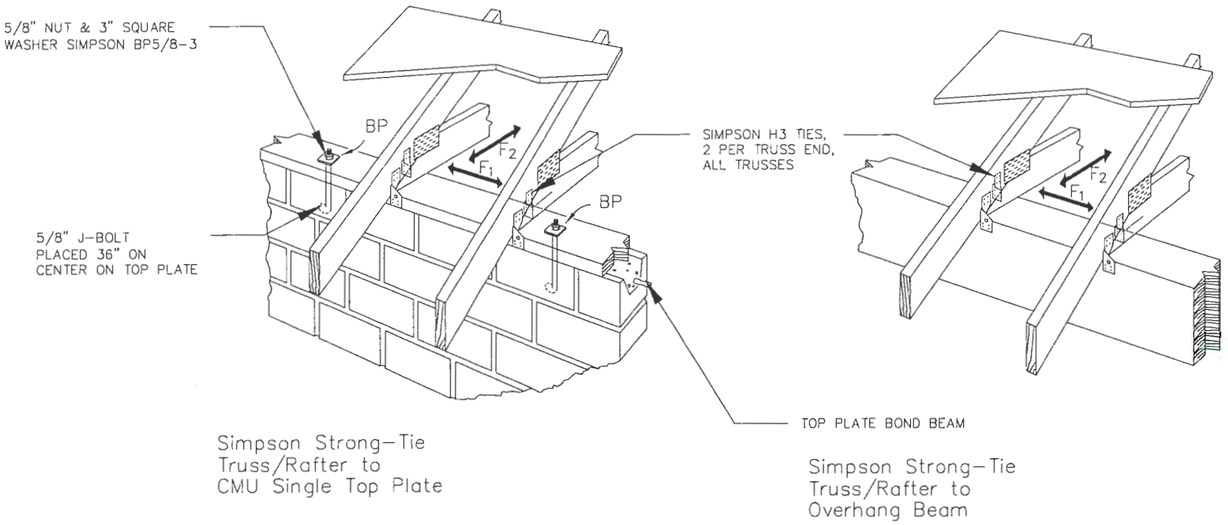

2 / S4 RAFTER TIE DETAILS
NOT TO SCALE

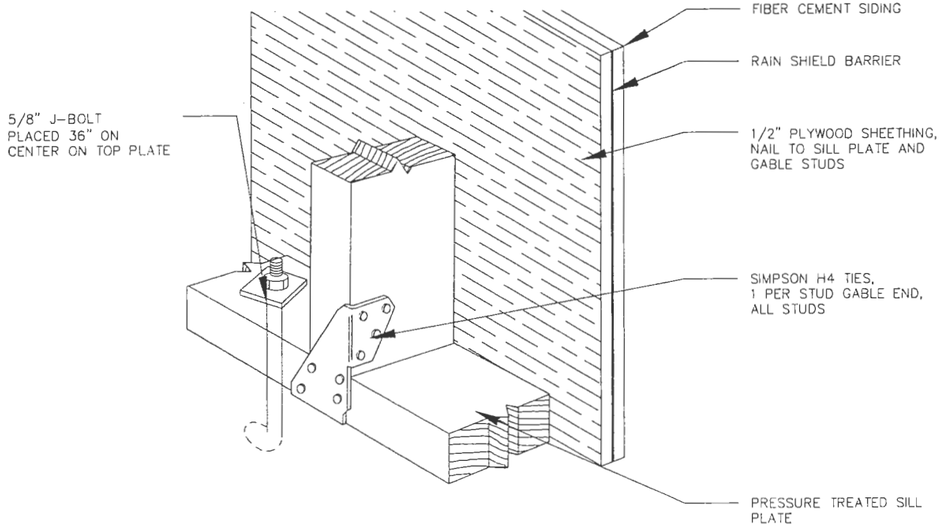

3 / S4 GABLE END TIE DETAILS
NOT TO SCALE

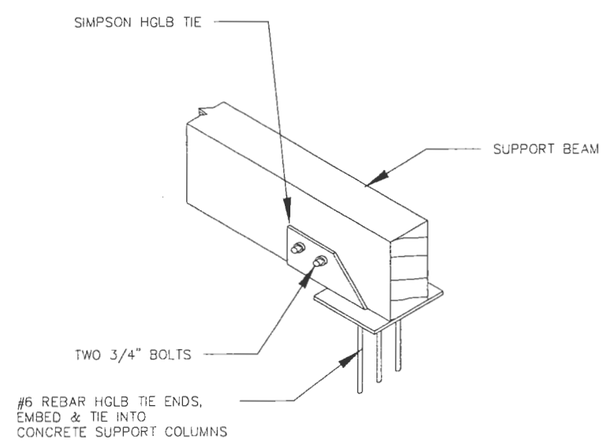

4 / S4 ROOF EAVE SUPPORT BEAM
NOT TO SCALE

REGISTERED PROFESSIONAL ENGINEER
56560PE
OREGON
JULY 9, 2001
JAMES G. PALLO
EXPIRATION DATE: 12/31/12

Civil West Engineering Services, Inc.
486 E Street
Coos Bay, Oregon 97420
541-266-8601
www.civilwest.com

REV	DATE	DESCRIPTION	BY

Designed By: JBH
Drawn By: JBH
Checked By: JGP
File: BASE MAP
Project No: 1202-022

CITY OF COOS BAY
500 CENTRAL AVENUE

PUMP STATION NO. 4
REPLACEMENT

STRUCTURE DETAILS
CONTINUED

Sheet No: S4
Date: 1/29/2011
16 of 28

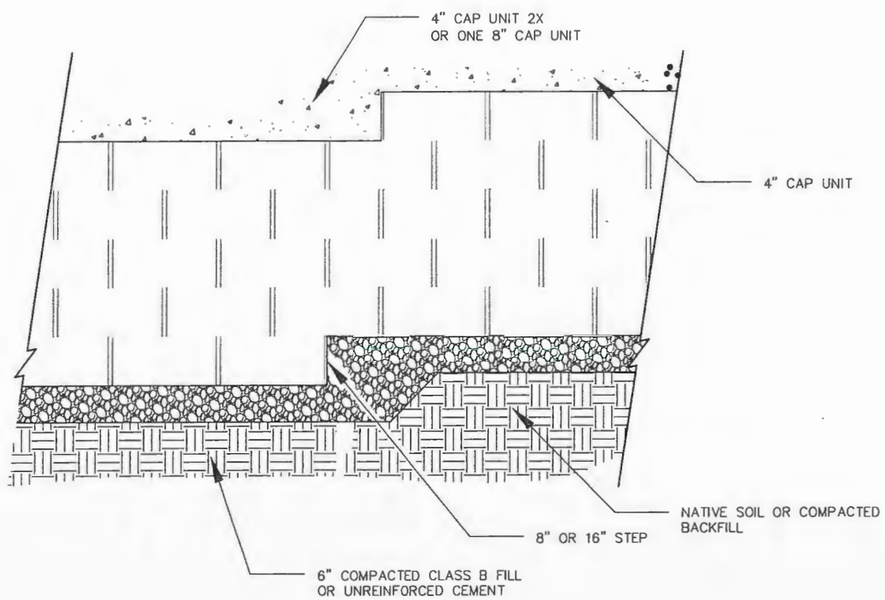

ADJUST WALL STEP TO MATCH
ACCESS RAMP GRADE

1/S5 WALL STEP ELEVATION FOR ACCESS RAMP
NOT TO SCALE

Base Leveling Pad Notes:

1. The leveling pad is to be constructed of crushed stone or 2,000 psi± unreinforced concrete

2. The base foundation is to be by the Engineer prior to placement of the leveling pad.

Compact Unit	
Width:	18"
*Depth:	12"
Height:	8"
*Weight:	90 lbs

Cap Unit	
Width:	18"
*Depth:	10 1/2"
Height:	4"
*Weight:	50 lbs

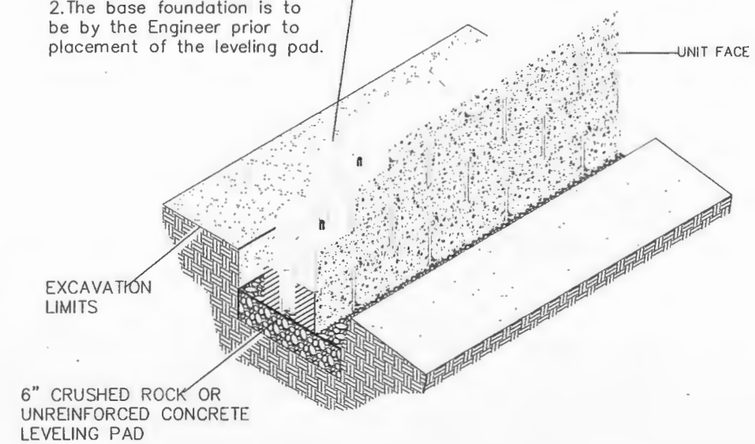

2/S5 ISOMETRIC BASE PAD VIEW
NOT TO SCALE

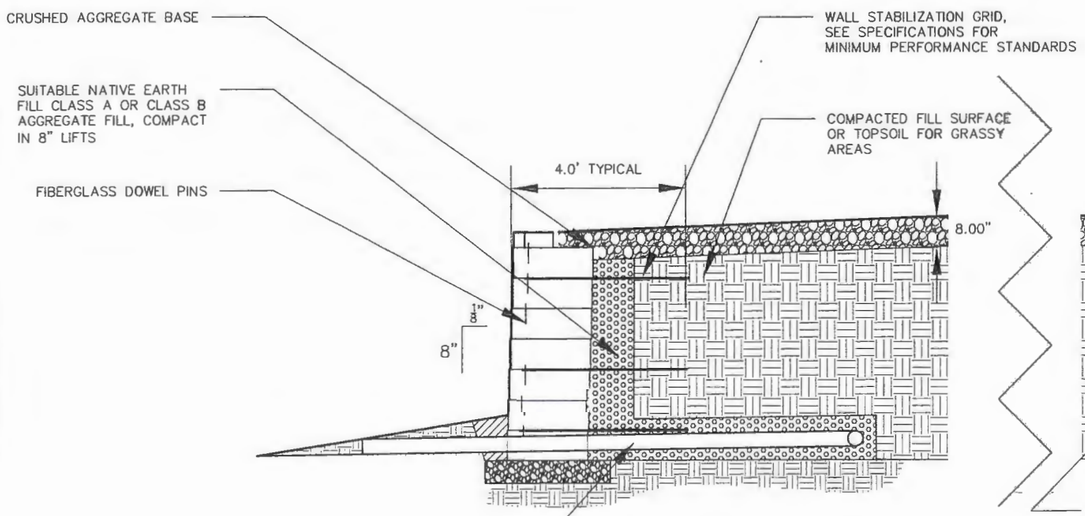

SHORT SECTION
TYPICAL 4'10" RETAINING WALL SECTIONS FOR NORTH, WEST AND SOUTH WALLS

TALL SECTION
TYPICAL 7' 10" RETAINING WALL SECTION FOR WEST WALL, REPLACING EXISTING RETAINING WALL ADJACENT TO PARKING LOT

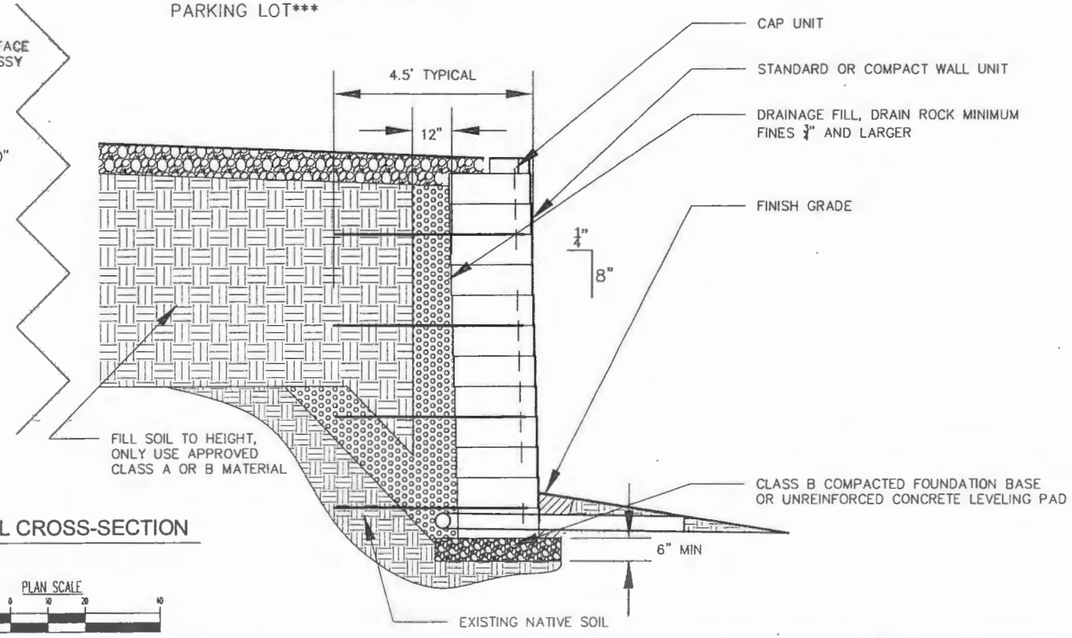

3/S5 FILL CROSS-SECTION

PLAN SCALE
20 0 10 20 40

REGISTERED PROFESSIONAL ENGINEER
56560PE
OREGON
JULY 9, 2001
JAMES G. PALLC
EXPIRATION DATE: 12/31/12

Civil West Engineering Services, Inc.
486 E Street
Coos Bay, Oregon 97420
541-266-8601
www.civilwest.com

REV.	DATE	DESCRIPTION	BY

Designed By: JBH
Drawn By: JBH
Checked By: JGP
File: BASE MAP
Project No. 1202-022

CITY OF COOS BAY
500 CENTRAL AVENUE

PUMP STATION NO. 4
REPLACEMENT

RETAINING WALL

Date 5/29/2011
Sheet No. S5
17 of 28

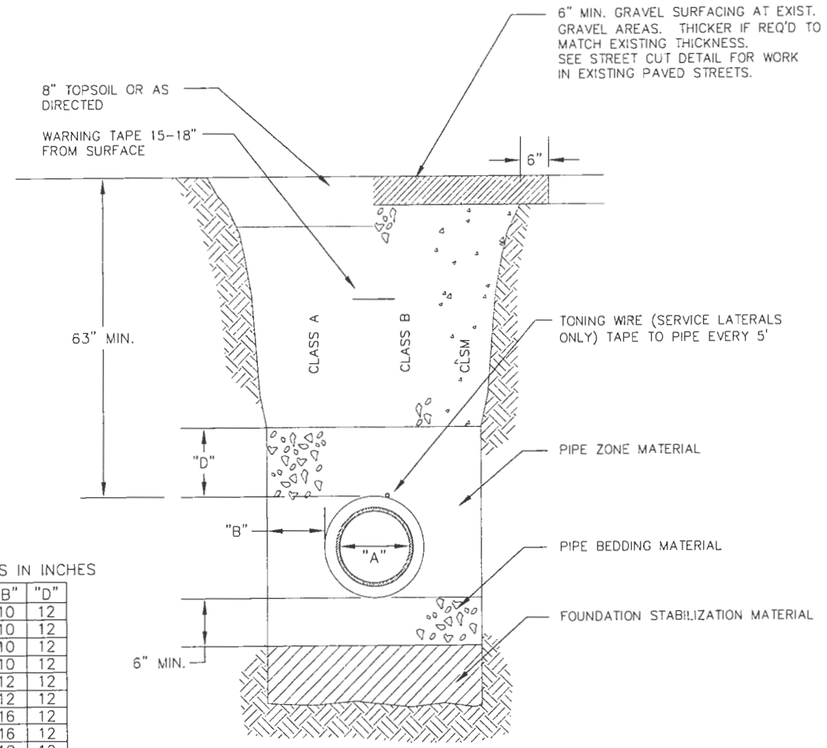

DIMENSIONS IN INCHES

"A"	"B"	"D"
4	10	12
6	10	12
8	10	12
10	10	12
12	12	12
15	12	12
18	16	12
21	16	12
24	18	12
30	18	12
36	24	14

NOTES:

1. TRENCH EXCAVATION SHALL BE CONDUCTED IN A SAFE MANNER WITH ALL NECESSARY BRACING AND SHORING PROVIDED FOR COMPLIANCE WITH OSHA.

2. FOUNDATION STABILIZATION SHALL BE PROVIDED WHEN MATERIAL AT BOTTOM OF TRENCH IS UNSUITABLE IN THE OPINION OF THE CITY TO PROVIDE A STABLE TRENCH BASE.

3. CONSTRUCTION IN PUBLIC RIGHT-OF-WAY SHALL COMPLY WITH CITY STANDARDS.

4. CLASS B BACKFILL REQUIRED IN ALL ROADWAYS AND TRAFFIC PATHS EXCEPT WHERE CLSM BACKFILL IS REQUIRED BY COUNTY, ODOT, OR CITY.

5. TONING WIRE REQUIRED AT SERVICE LATERALS. WIRE SHALL BE 12 GA. MINIMUM SOLID COPPER WIRE WITH GREEN 30 MIL THICK HDPE INSULATION RATED FOR DIRECT BURY. USE APPROVED WATERPROOF SPLICE AT ALL CONNECTIONS.

6. WARNING TAPE SHALL BE 6" WIDE, 4 MIL THICK, APWA GREEN, READING "CAUTION SEWER LINE BURIED BELOW".

7. MATERIALS SHALL BE IN ACCORDANCE WITH THE CITY SANITARY SEWER DESIGN STANDARDS MANUAL.

8. COMPACT ALL FILL AS SPECIFIED.

City of Coos Bay 500 Central Ave Coos Bay, Oregon 97420 541.269.8918	TYPICAL TRENCH DETAIL SANITARY SEWER	DETAIL NO. S-100 JAN. 2008

1 / D1 TRENCH DETAIL
NOT TO SCALE

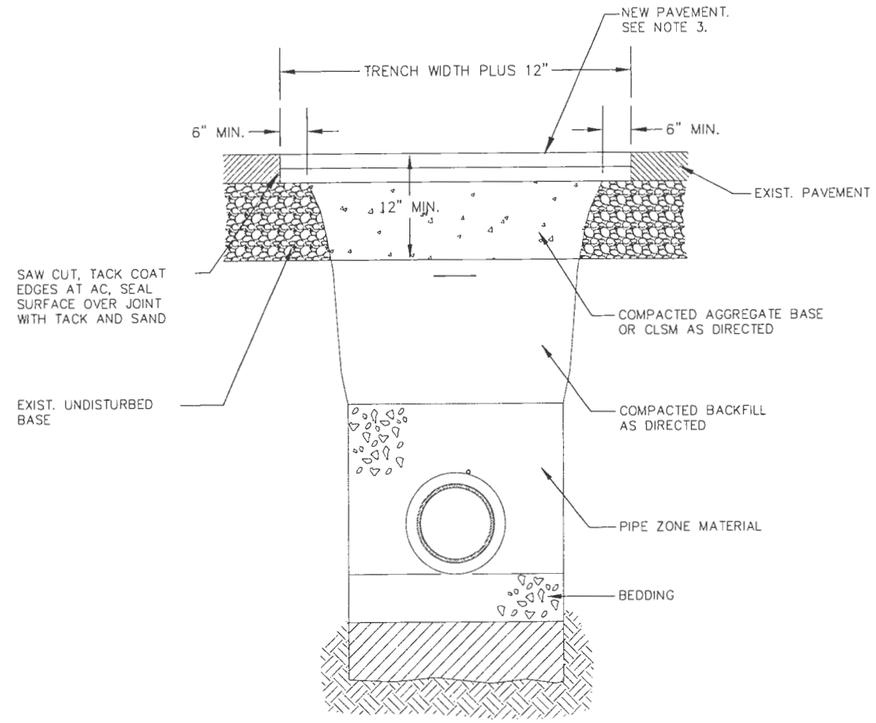

NOTES:

1. ALL EXISTING AC OR PCC PAVEMENT SHALL BE SAWCUT IMMEDIATELY PRIOR TO REPAVING.

2. CONCRETE PAVEMENT SHALL BE REPLACED WITH CONCRETE TO A MINIMUM THICKNESS OF 6 INCHES OR TO THE THICKNESS OF REMOVED CONCRETE PAVEMENT, WHICHEVER IS GREATER.

3. PLACE AC MIX TO A MINIMUM THICKNESS OF 4 INCHES OR THE THICKNESS OF REMOVED PAVEMENT, WHICHEVER IS GREATER. COMPACT AS DIRECTED. AC PAVEMENT SHALL BE PLACED IN AT LEAST TWO 2" LIFTS.

4. COMPLY WITH THE REQUIREMENTS OF THE AGENCY HAVING JURISDICTION OVER THE ROAD IN WHICH THE STREET CUT OCCURS.

City of Coos Bay 500 Central Ave Coos Bay, Oregon 97420 541.269.8918	STREET CUT STANDARD DETAIL	DETAIL NO. S-105 JAN. 2008

2 / D1 STREET CUT
NOT TO SCALE

REGISTERED PROFESSIONAL ENGINEER
56580PE
OREGON
JULY 9, 2001
JAMES G. PALLO
EXPIRATION DATE: 12/31/12

Civil West Engineering Services, Inc.
486 E Street
Coos Bay, Oregon 97420
541-266-8601
www.civilwest.com

REV	DATE	DESCRIPTION	BY

Designed By JBH | Drawn By JBH | Checked By JGP
File: BASE MAP | Project No. 1202-022

CITY OF COOS BAY
500 CENTRAL AVENUE

PUMP STATION NO. 4
REPLACEMENET

STANDARD DETAILS TRENCHING

Date 5/29/2011 | Sheet No. D1 | 18 of 28

SCALED X1.5

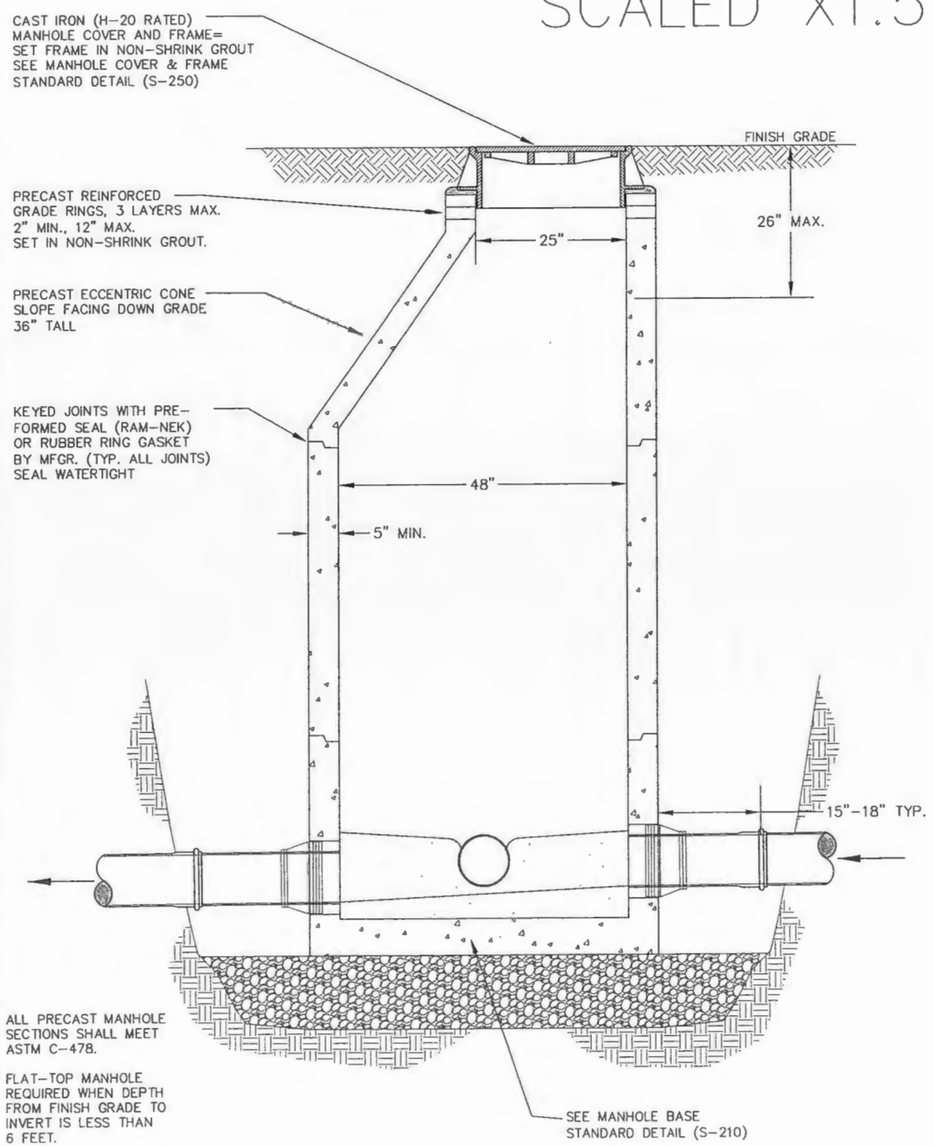

ALL PRECAST MANHOLE SECTIONS SHALL MEET ASTM C-478.

FLAT-TOP MANHOLE REQUIRED WHEN DEPTH FROM FINISH GRADE TO INVERT IS LESS THAN 6 FEET.

INTERIOR DROPS EXCEEDING 24" REQUIRE DROP MANHOLE.

City of Coos Bay
500 Central Ave
Coos Bay, Oregon 97420
541.269.8918

STANDARD MANHOLE
PIPES LESS THAN 24" DIAM.

DETAIL NO. S-200
JAN. 2008

1 / D2 STANDARD MANHOLE
NOT TO SCALE

SCALED X1.5

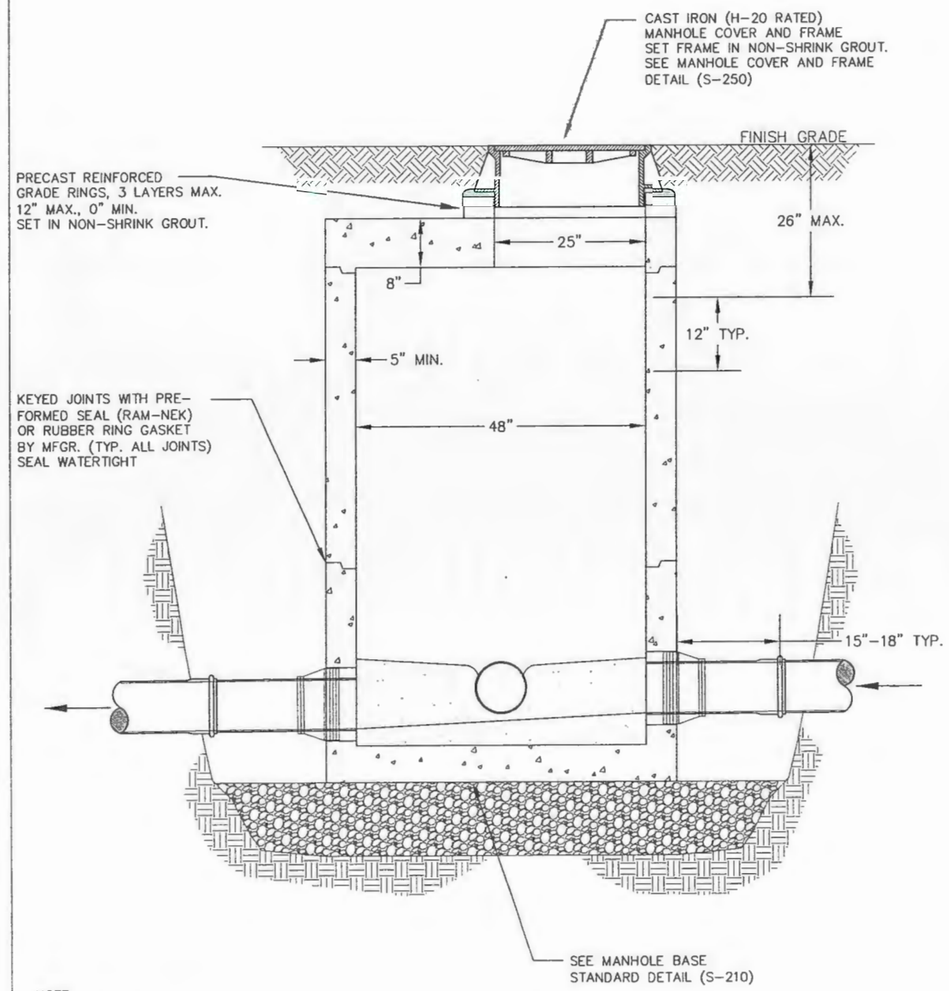

NOTE:
1) ALL PRECAST MANHOLE SECTIONS SHALL MEET ASTM C-478.
2) STANDARD MANHOLE REQUIRED WHEN DEPTH FROM FINISH GRADE TO INVERT IS 6 FEET OR MORE.

City of Coos Bay
500 Central Ave
Coos Bay, Oregon 97420
541.269.8918

FLAT-TOP MANHOLE
PIPES LESS THAN 24" DIAM.

DETAIL NO. S-205
JAN. 2008

2 / D2 FLAT TOP MANHOLE
NOT TO SCALE

REGISTERED PROFESSIONAL ENGINEER
56660PE
OREGON
JULY 9, 2001
JAMES G. PALLO
EXPIRATION DATE: 12/31/12

Civil West Engineering Services, Inc.
486 E Street
Coos Bay, Oregon 97420
541-266-8601
www.civilwest.com

REV.	DATE	DESCRIPTION	BY

Designed By: JBH
Drawn By: JBH
Checked By: JGP
File: BASE MAP
Project No: 1202-022

CITY OF COOS BAY
500 CENTRAL AVENUE

PUMP STATION NO. 4
REPLACEMENT

STANDARD DETAILS MANHOLES

Date: 5/29/2011
Sheet No: D2
19 of 28

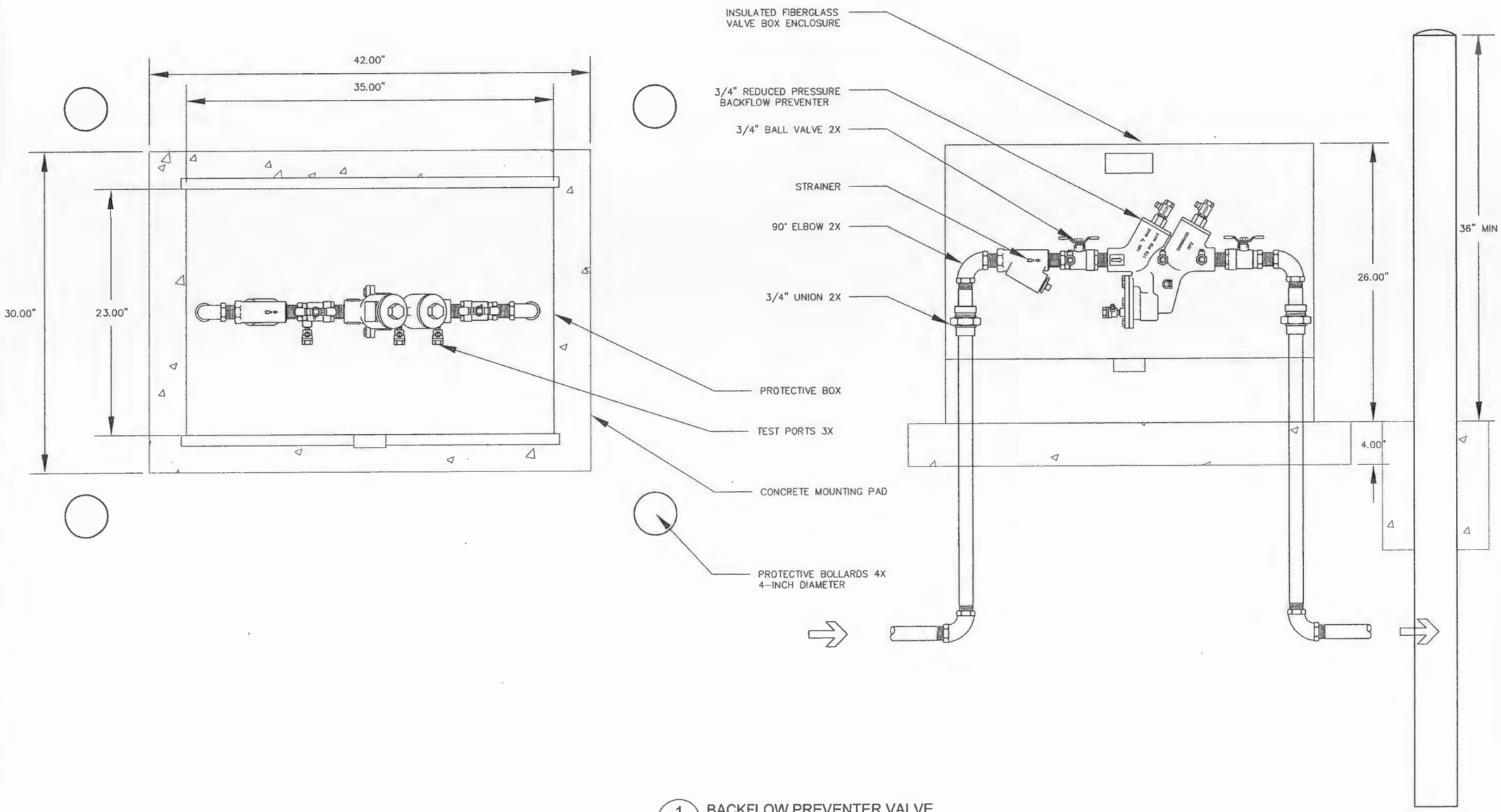

1 / D3 BACKFLOW PREVENTER VALVE

PLAN SCALE

10" 0 5" 10" 20"

REGISTERED PROFESSIONAL ENGINEER 56560PE OREGON JULY 9, 2001 JAMES G. PALLO

EXPIRATION DATE: 12/31/12

Civil West Engineering Services, Inc.

486 E Street
Coos Bay, Oregon 97420

541-266-8601
www.civilwest.com

REV.	DATE	DESCRIPTION	BY

Designed By: JBH
Drawn By: JBH
Checked By: JGP
File: BASE MAP
Project No: 1202-022

CITY OF COOS BAY
500 CENTRAL AVENUE

PUMP STATION NO. 4
REPLACEMENT

BACKFLOW PREVENTER DETAILS

Sheet No. D3
Date 5/29/2011

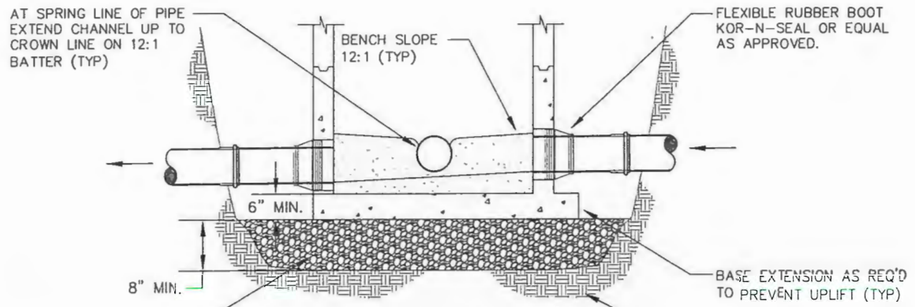

PRECAST BASE

PRECAST BASE HEIGHT SUFFICIENT TO AVOID JOINT AT PIPE PENETRATIONS

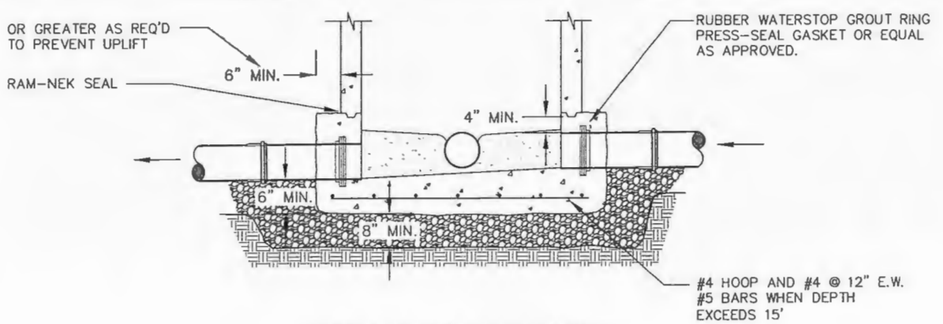

CAST-IN-PLACE BASE

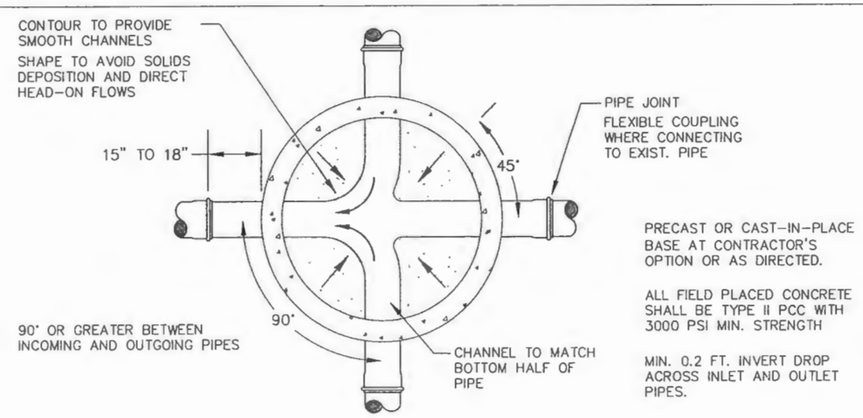

PRECAST OR CAST-IN-PLACE BASE AT CONTRACTOR'S OPTION OR AS DIRECTED.

ALL FIELD PLACED CONCRETE SHALL BE TYPE II PCC WITH 3000 PSI MIN. STRENGTH

MIN. 0.2 FT. INVERT DROP ACROSS INLET AND OUTLET PIPES.

City of Coos Bay 500 Central Ave Coos Bay, Oregon 97420 541.269.8918	MANHOLE BASE STANDARD DETAILS	DETAIL NO. S-210 JAN. 2008

1 / D4 MANHOLE BASE
NOT TO SCALE

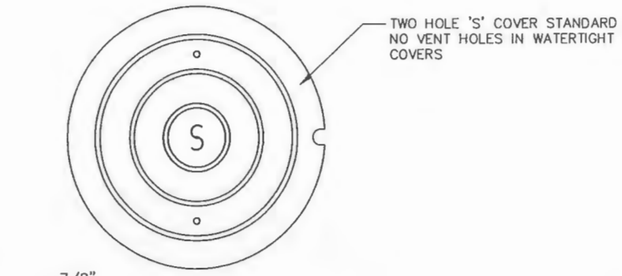

COVER (150 LBS)

(OLYMPIC FOUNDRY MH26S, OR APPROVED EQUAL)

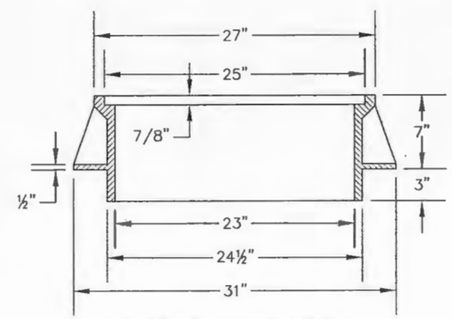

FRAME (237 LBS)

(OLYMPIC FOUNDRY MH26A, OR APPROVED EQUAL)

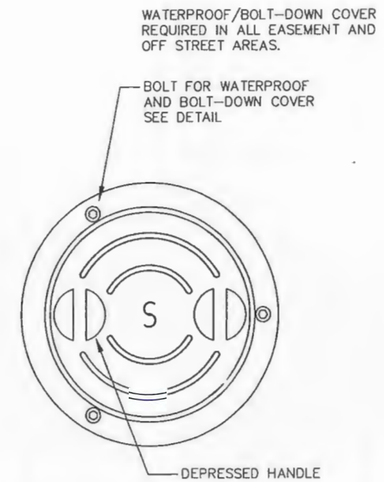

(OLYMPIC FOUNDRY MH26WT, OR APPROVED EQUAL)

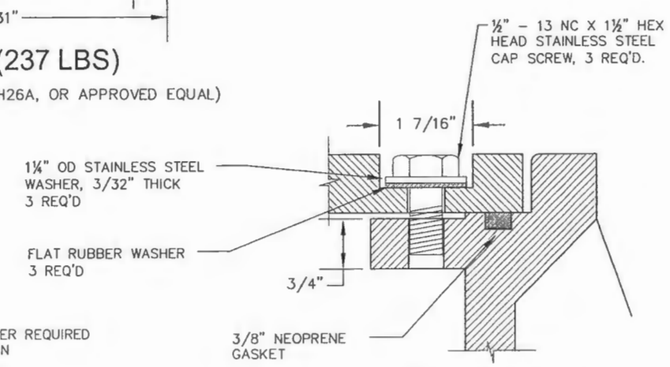

BOLT DOWN DETAIL

NOTE:
1) TAMPER PROOF FRAME AND COVER REQUIRED OUTSIDE OF RIGHT OF WAY OR IN UNDEVELOPED AREAS.
2) MANHOLE FRAMES AND COVER SHALL HAVE H-20 RATING

City of Coos Bay 500 Central Ave Coos Bay, Oregon 97420 541.269.8918	MANHOLE COVER AND FRAME DETAILS	DETAIL NO. S-250 JAN. 2008

2 / D4 MANHOLE COVER & FRAME
NOT TO SCALE

REGISTERED PROFESSIONAL ENGINEER
56560PE
OREGON
JULY 9, 2001
JAMES G. PALLO
EXPIRATION DATE: 12/31/12

Civil West Engineering Services, Inc.
486 E Street
Coos Bay, Oregon 97420
541-266-8601
www.civilwest.com

REV.	DATE	DESCRIPTION	BY

Designed By: JBH
Drawn By: JBH
Checked By: JGP
File: BASE MAP
Project No: 1202-022

CITY OF COOS BAY
500 CENTRAL AVENUE

PUMP STATION NO. 4 REPLACEMENT

STANDARD DETAILS
MANHOLE BASE AND COVER

Detail: D4
Sheet No.
1/29/2011
21 OF 28

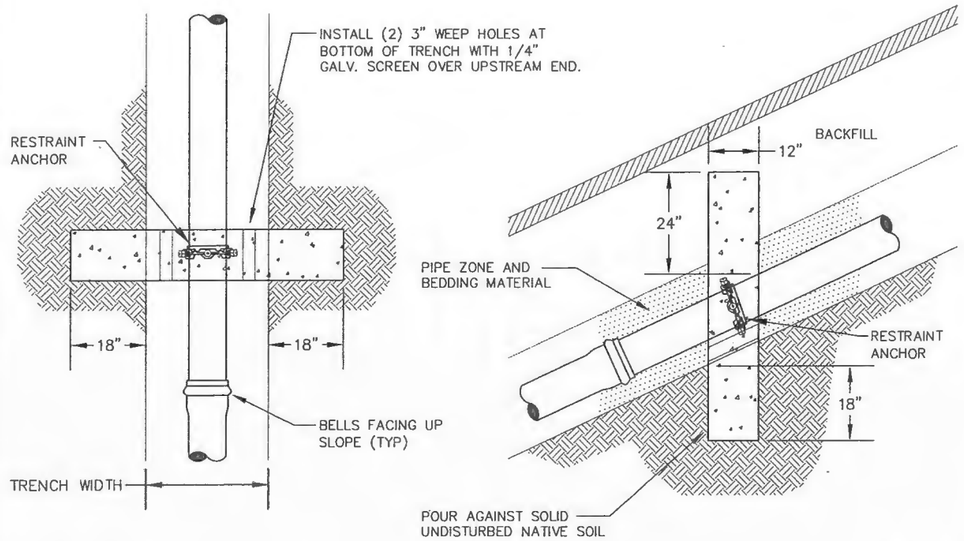

NOTES:

1. CUT-OFF WALLS REQ'D AT ALL PIPELINES WHERE SLOPE EXCEEDS 20%.
2. RESTRAINED JOINT PIPE REQUIRED AT SLOPES BETWEEN 15% AND 20%.
3. WALLS SHALL BE FORMED WITHIN TRENCH. REMOVE FORMS PRIOR TO BACKFILLING.
4. CONCRETE SHALL HAVE 3000 PSI COMPRESSIVE STRENGTH MIN. (CLASS 3000).
5. SPACING OF WALLS SHALL BE:

SLOPE	SPACING
20–34%	35 FEET
35–50%	25 FEET
51–+%	15 FEET

City of Coos Bay
500 Central Ave
Coos Bay, Oregon 97420
541.269.8918

PIPE ANCHOR / TRENCH CUT-OFF WALL DETAIL

DETAIL NO. S-150
JAN. 2008

1 / D5 CUT OFF WALL
NOT TO SCALE

NOTE:

LOCATE EYE BOLTS WITHIN REACH FROM THE SURFACE THROUGH THE ACCESS HATCH.

LOCATE PRESSURE SENSOR IN CLEAR AREA BETWEEN PUMPS IN ACCORDANCE WITH MFG RECOMMENDATIONS.

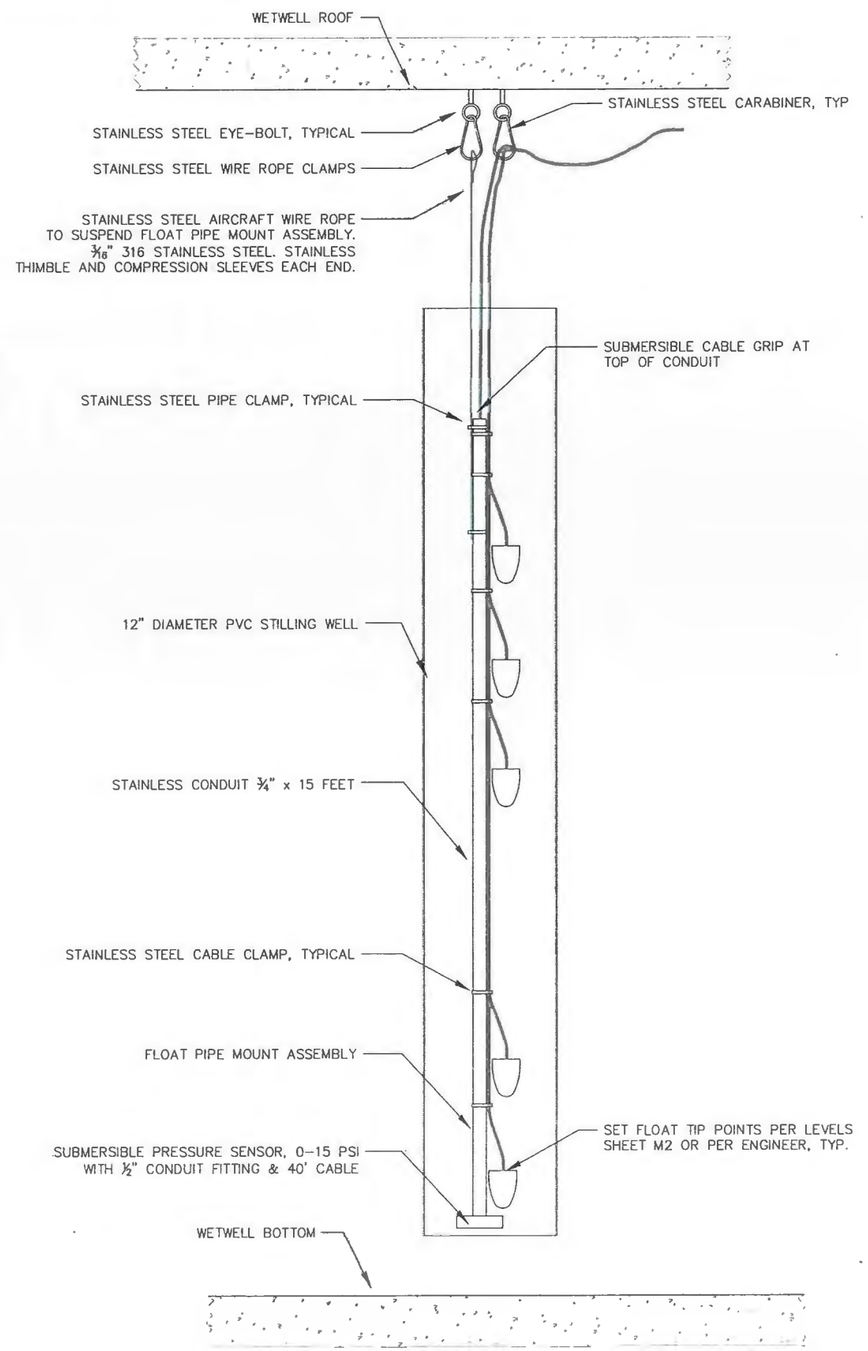

2 / D5 WETWELL SENSOR TREE
NOT TO SCALE

REGISTERED PROFESSIONAL ENGINEER
56560PE
OREGON
JULY 9, 2001
JAMES G. PALLO
EXPIRATION DATE: 12/31/12

Civil West Engineering Services, Inc.
486 E Street
Coos Bay, Oregon 97420
541-266-8601
www.civilwest.com

REV.	DATE	DESCRIPTION	BY

Designed By: JBH
Drawn By: JBH
Checked By: JGP
Project No: 1202-022
File: BASE MAP

CITY OF COOS BAY
500 CENTRAL AVENUE

PUMP STATION NO. 4 REPLACEMENT

STANDARD DETAILS CUT OFF WALL
SENSOR TREE DETAILS

Date: 1/29/2011
Sheet No. D5
22 of 28

FABRICATION NOTES:

DIMENSION SCALE IS APPROXIMATE. VERIFY ALL DIMENSIONS BY ACTUAL MATERIALS USED AND SITE CONDITIONS.

ALL MOUNTING HARDWARE SHALL BE STAINLESS STEEL UNLESS OTHERWISE NOTED. PANEL & SHEET MOUNTING BOLTS SHALL INCLUDE STAINLESS STEEL WASHERS & SPLIT RING LOCK WASHERS.

DRILL & TAP FASTENERS TO THE BOLLARD UPRIGHTS. GREASE ALL BOLTS BEFORE INSTALLATION. FILL BOLLARDS WITH CONCRETE AFTER INSTALLING BOLTS. ALL BOLTS SHALL BE REMOVABLE AFTER CONSTRUCTION.

PRIME & PAINT BOLLARDS WITH OIL BASED ENAMEL SPECIALLY FORMULATED FOR COATING OVER GALVANIZED STEEL. COLOR GREY TO MATCH PVC SHEET.

RADIUS ALL EXPOSED EDGES & CORNERS OF SHEETING AND HARDWARE SUCH THAT EDGES ARE NOT SHARP.

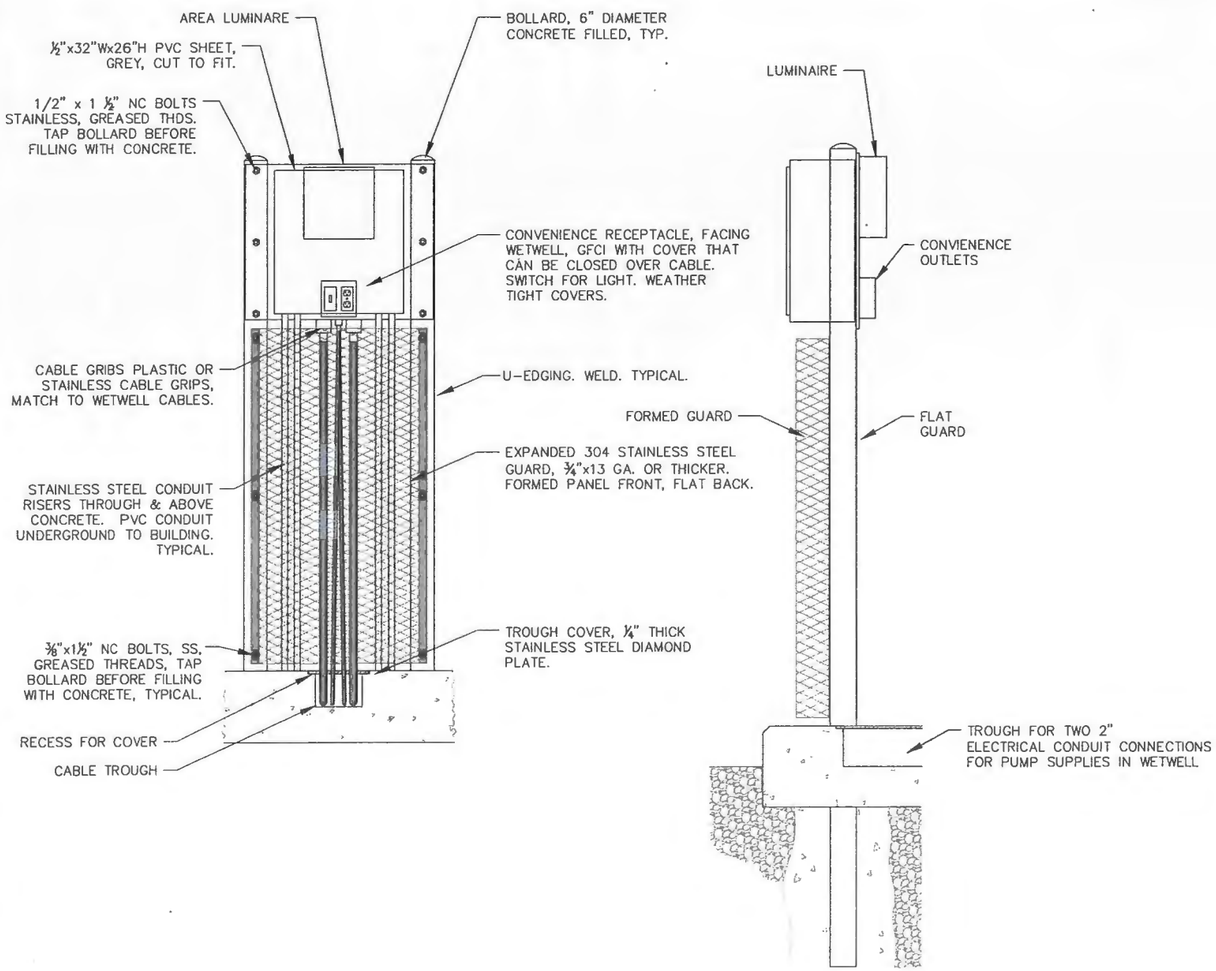

1 / D6 WETWELL PANEL & JUNCTION BOX
NOT TO SCALE

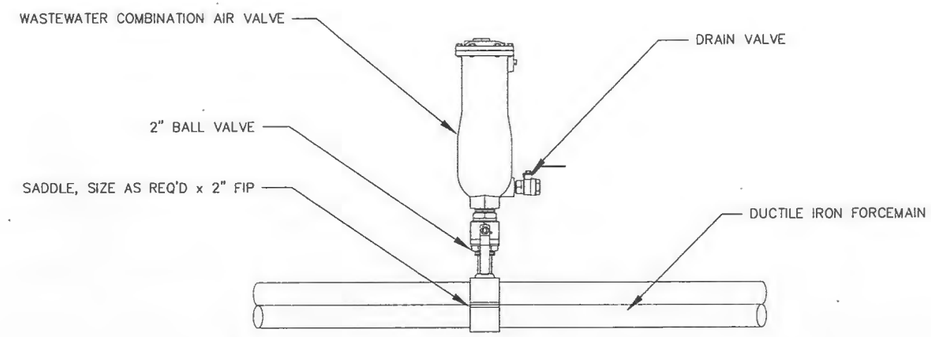

2 / D6 2" WW COMB. AIR VALVE DETAIL
NOT TO SCALE

REGISTERED PROFESSIONAL ENGINEER
56660PE
OREGON
JULY 9, 2001
JAMES G. PALLO
EXPIRATION DATE: 12/31/12

Civil West Engineering Services, Inc.
541-266-8601
www.civilwest.com
486 E Street
Coos Bay, Oregon 97420

REV.	DATE	DESCRIPTION	BY

Designed By: JBH
Drawn By: JBH
Checked By: JGP
File: BASE MAP
Project No. 1202-022

CITY OF COOS BAY
500 CENTRAL AVENUE

PUMP STATION NO. 4
REPLACEMENT

WETWELL PANEL DETAILS
COMBINATION AIR RELEASE DETAILS

Sheet No. D6
Date 1/29/2011

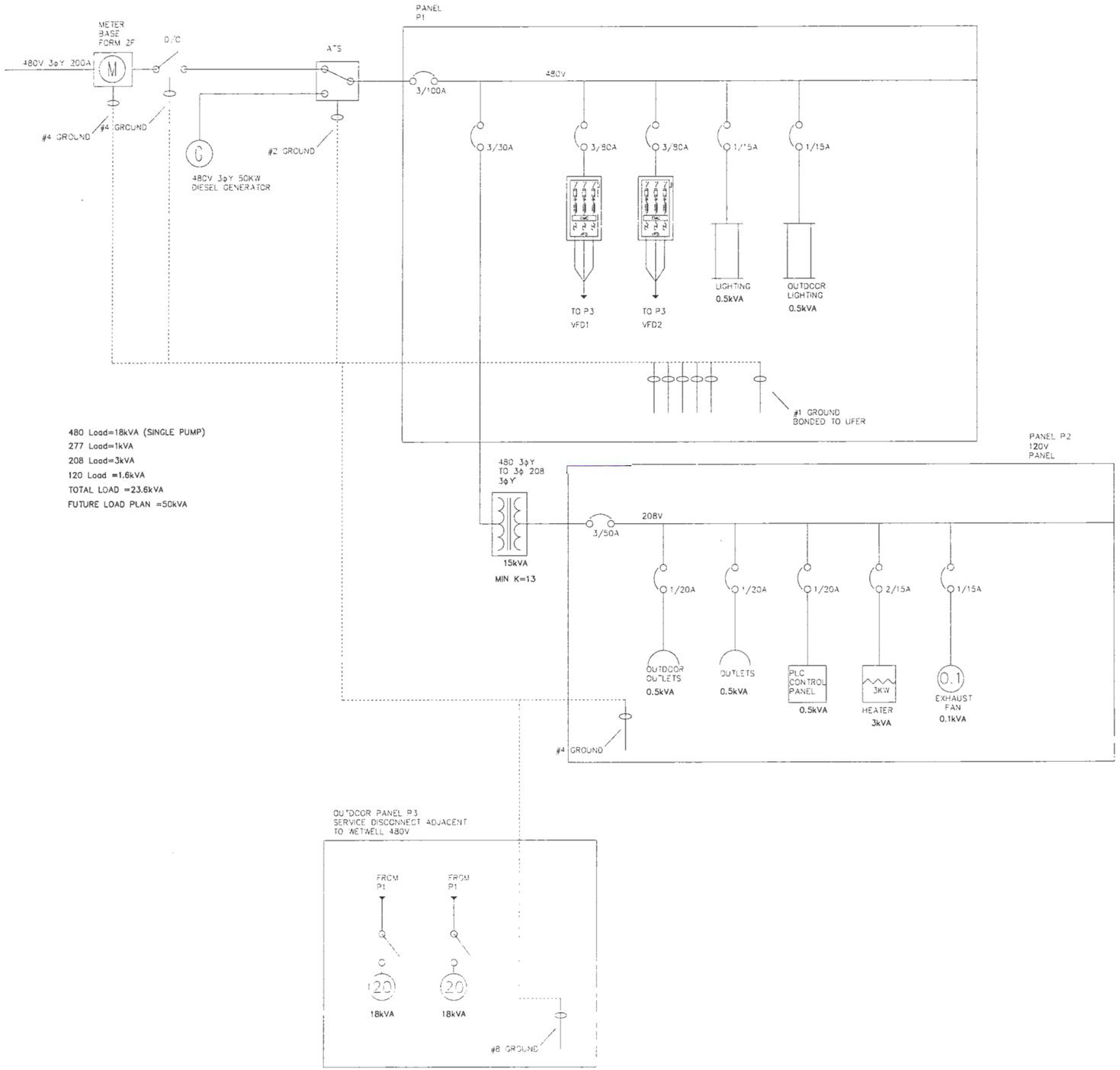

REGISTERED PROFESSIONAL ENGINEER
56560PE
OREGON
JULY 9 2001
JAMES G. PALLO
EXPIRATION DATE: 12/31/12

Civil West Engineering Services, Inc.
486 E Street
Coos Bay, Oregon 97420
541-266-8601
www.civilwest.com

REV	DATE	DESCRIPTION	BY

Designed By JBH
Drawn By JBH
Checked By JGP
File BASE MAP
Project No 1202-022

CITY OF COOS BAY
500 CENTRAL AVENUE

PUMP STATION NO. 4 REPLACEMENT

ONE LINE DIAGRAM

Date 1/29/2011
Sheet No. E1
24 of 28

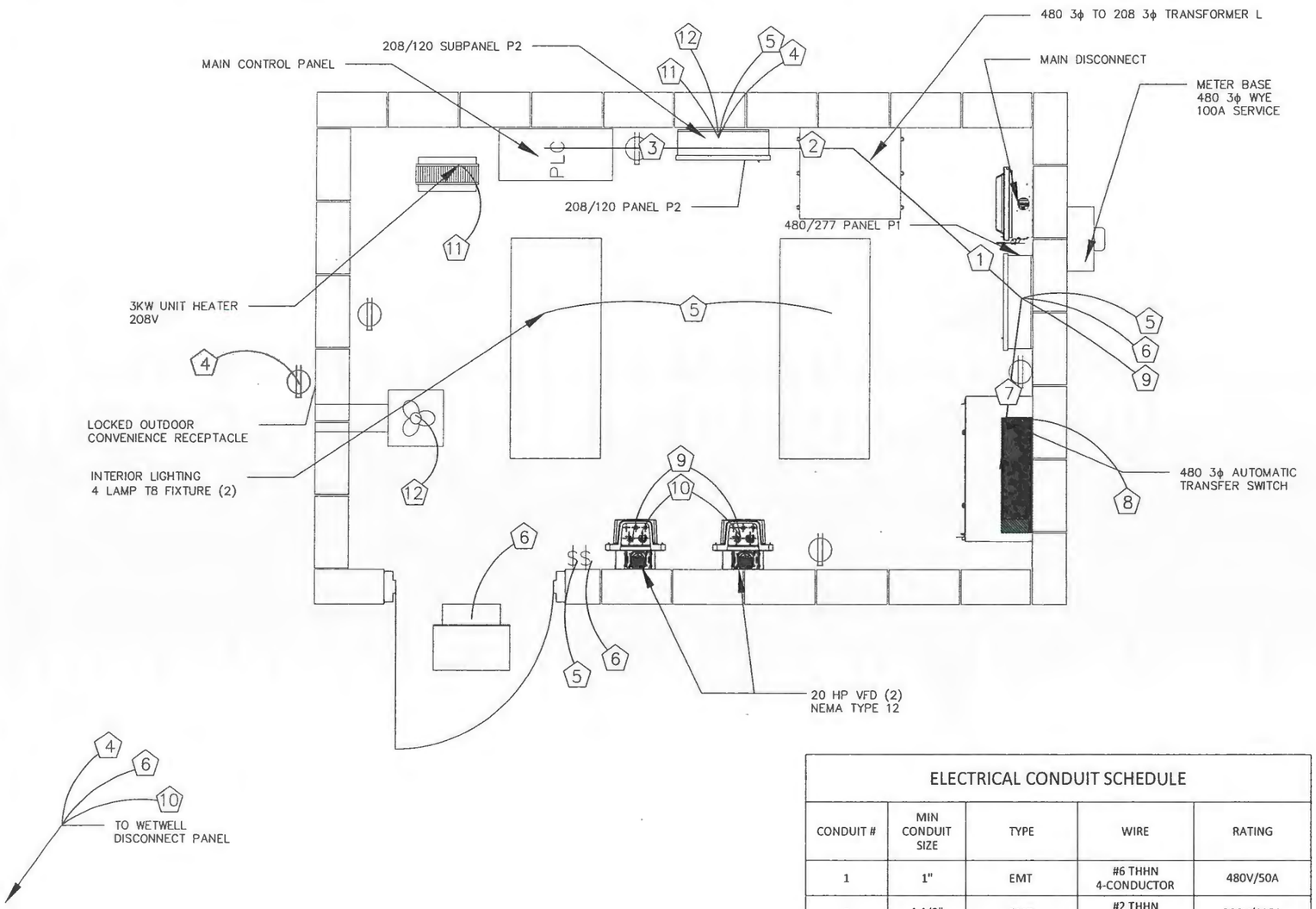

1. MAIN DISTRIBUTION PANEL TO TRANSFORMER
2. 480/208 TRANSFORMER TO SUBPANEL
3. SUBPANEL TO PLC CONTROL PANEL
4. OUTDOOR POWER CIRCUIT
5. INDOOR LIGHTING
6. OUTDOOR LIGHTING
7. 480 VOLT TO TRANSFER SWITCH
8. GENERATOR BACKUP POWER TO TRANSFER SWITCH
9. MAIN PANEL TO MOTOR DRIVES
10. MOTOR DRIVES TO SUBMERSIBLE PUMPS
11. SUBPANEL TO ELECTRIC HEATER
12. VENTILATION FAN
13. INDOOR CONVENIENCE RECEPTACLE CIRCUIT

INSTALL 3" PVC CONDUIT AS SHOWN ON PLAN SHEETS FOR UTILITY POWER SEE 1/C2 1/C3

NOTES:

1. CONTRACTOR MAY COMBINE CONDUIT RUNS PROVIDING NO RACEWAY EXCEEDS 30% CROSS SECTION OF CONDUCTORS TO TUBING

EXCEPTION: PUMP CONNECTIONS TO WETWELL CONTROL PANEL MUST HAVE INDIVIDUAL 2" CONDUITS

2. ALL ABOVE-GROUND OUTDOOR CONDUIT SHALL BE STAINLESS RIGID

ELECTRICAL CONDUIT SCHEDULE

CONDUIT #	MIN CONDUIT SIZE	TYPE	WIRE	RATING
1	1"	EMT	#6 THHN 4-CONDUCTOR	480V/50A
2	1 1/2"	EMT	#2 THHN 4-CONDUCTOR	208V/115A
3	1/2"	EMT	#12 THHN 2-CONDUCTOR	120V/20A
4	1/2"	EMT/PVC	#12 THHN 2-CONDUCTOR	120V/20A
5	1/2"	EMT	#14 THHN 2-CONDUCTOR	277V/5A
6	1/2"	EMT/PVC	#12 THHN 2-CONDUCTOR	277V/5A
7	1 1/2"	EMT	#2 THHN 4-CONDUCTOR	480V/100A
8	1 1/2"	RIGID/PVC	#2 THHN 4-CONDUCTOR	480V/100A
9	1"	EMT	#10 THHN 8-CONDUCTORS	480V/25A
10	2"	PVC/RIGID	#8 SHEILDED TWISTED SETS (2)	480V/25A
11	1/2"	EMT	#12 THHN 3-CONDUCTORS	208V/20A
12	1/2"	EMT	#14 THHN 2-CONDUCTORS	120V/5A
13	1/2"	EMT	#12 THHN 2-CONDUCTORS	120V/15A

REGISTERED PROFESSIONAL ENGINEER 56580PE OREGON JULY 9, 2001 JAMES G. PALLO

EXPIRATION DATE: 12/31/12

Civil West Engineering Services, Inc.
486 E Street
Coos Bay, Oregon 97420
541-266-8601
www.civilwest.com

REV.	DATE	DESCRIPTION	BY

Designed By: JBH Drawn By: JBH Checked By: JGP
File: BASE MAP Project No: 1202-022

CITY OF COOS BAY
500 CENTRAL AVENUE

PUMP STATION NO. 4
REPLACEMENT

ELECTRICAL CONDUIT

Date: 5/29/2011 Sheet No. E2 25 of 28

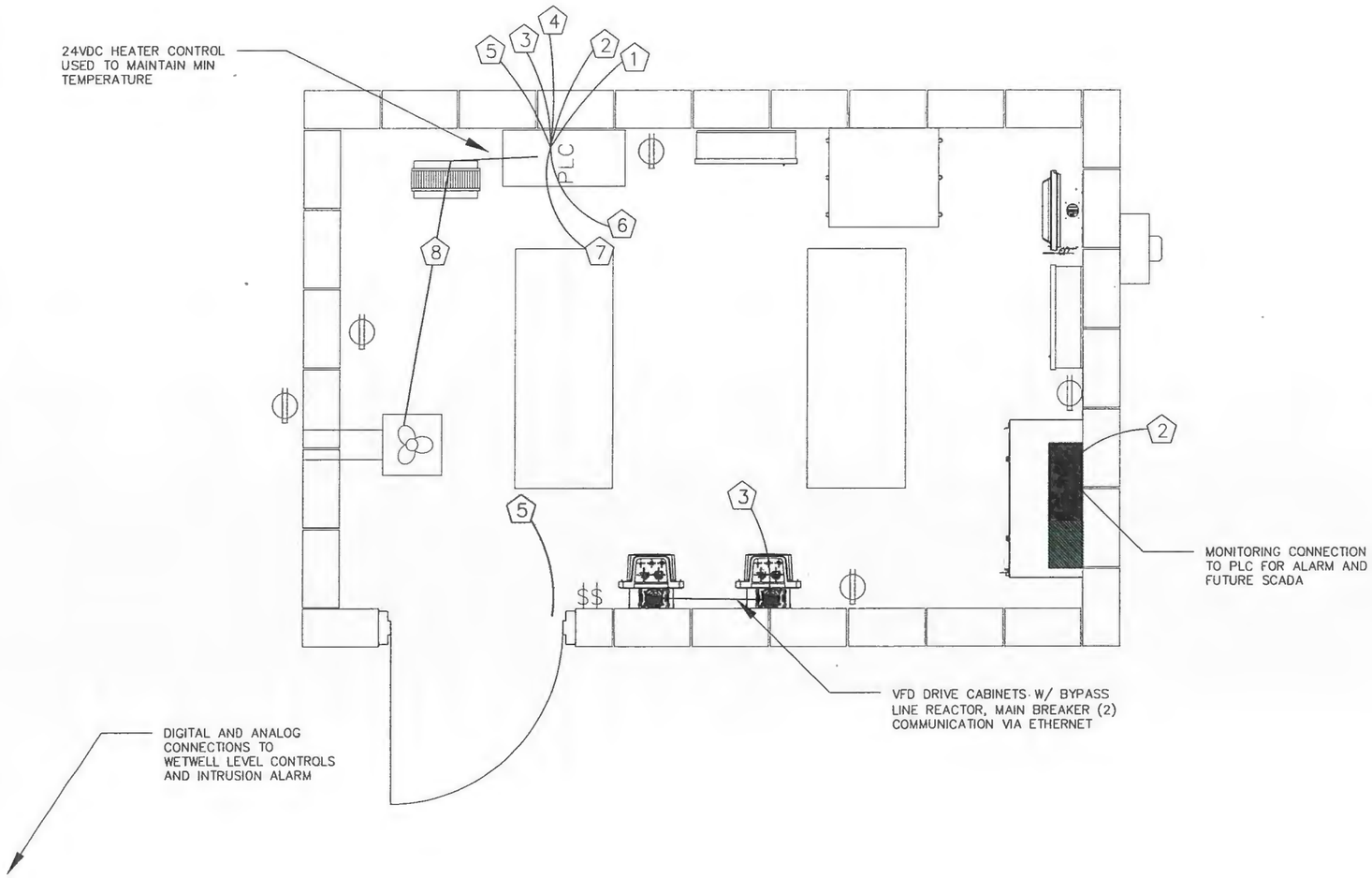

1. TO FLOW MAGMETER VAULT
2. ETHERNET GENERATOR MONITORING
3. ETHERNET VFD CONTROL
4. VALVE VAULT PRESSURE AND LIMIT SWITCHES
5. DOOR INTRUSION ALARM
6. WETWELL 110V FLOATS
7. WETWELL PRESSURE TRANSDUCER & REDUNDANT FLOATS
8. THERMOSTAT CONTROL FOR HEATER AND EXHAUST

CONTROL CONDUIT SCHEDULE

CONDUIT #	MIN CONDUIT SIZE	TYPE	CIRCUIT TYPE	CIRCUIT(S)
1	3/4"	PVC	4-20MA ANALOG	FLOWMETER
2	1/2"	PVC OR EMT	ETHERNET	ATS MONITORING
3	3/4"	PVC OR EMT	ETHERNET	PUMP 1 VFD, PUMP 2 VFD
4	1/2"	PVC	4-20MA ANALOG, 24V DIGITAL	VALVE VAULT
5	1/2"	PVC OR EMT	24V DIGITAL	DOOR INTRUSION ALARM
6	1"	PVC	110V AC	WETWELL FLOATS (3)
7	1"	PVC	4-20MA ANALOG, 24V DIGITAL	WETWELL TRANSDUCER, FLOATS, INTRUSION ALARM, OVERFLOW METER
8	1/2"	PVC OR EMT	24V DIGITAL	THERMOSTAT

REGISTERED PROFESSIONAL ENGINEER
56560PE
OREGON
JULY 9, 2001
JAMES G. PALLO
EXPIRATION DATE: 12/31/12

Civil West Engineering Services, Inc.
486 E Street
Coos Bay, Oregon 97420
541-266-8601
www.civilwest.com

REV.	DATE	DESCRIPTION	BY

Designed By: JBH
Drawn By: JBH
Checked By: JGP
Project No. 1202-022
File: BASE MAP

CITY OF COOS BAY
500 CENTRAL AVENUE

PUMP STATION NO. 4 REPLACEMENT

ELECTRICAL CONTROL CONDUIT

Date: 1/29/2011
Sheet No. E3
26 of 28

ELECTRICAL PANEL 1, 100 AMP MAIN BREAKER, 480/277V, AIC RATING 10,000A

WIRE	POSITION	CIRCUIT	BREAKER SIZE	ESTIMATED LOAD	PHASE	ESTIMATED LOAD	BREAKER SIZE	CIRCUIT	POSITION	WIRE
101	1	SURGE	60A	PEAK SURGE	A	2KW	50A	TRANSFORMER	2	102
103	3	SURGE		PEAK SURGE	B	2KW		TRANSFORMER	4	104
105	5	SURGE		PEAK SURGE	C	600W		TRANSFORMER	6	106
107	7	DRIVE1	80A	4.8KW	A	4.8KW	80A	DRIVE2	8	108
109	9	DRIVE1		4.8KW	B	4.8KW		DRIVE2	10	110
111	11	DRIVE1		4.8KW	C	4.8KW		DRIVE2	12	112
113	13	INDOOR LIGHT	15A	220W	A	0	NA	SPARE	14	114
115	15	OUTDOOR LIGHT	15A	250W	B	0	NA	SPARE	16	116
117	17	SPARE	NA	0	C	0	NA	SPARE	18	118
119	19	SPARE	NA	0	A	0	NA	SPARE	20	120
121	21	SPARE	NA	0	B	0	NA	SPARE	22	122
123	23	SPARE	NA	0	C	0	NA	SPARE	24	124
125	25	SPARE	NA	0	A	0	NA	SPARE	26	126
127	27	SPARE	NA	0	B	0	NA	SPARE	28	128
129	29	SPARE	NA	0	C	0	NA	SPARE	30	130

ELECTRICAL PANEL 2, 50AMP MAIN BREAKER, 208/120V, AIC RATING 10,000A

WIRE	POSITION	CIRCUIT	BREAKER SIZE	ESTIMATED LOAD	PHASE	ESTIMATED LOAD	BREAKER SIZE	CIRCUIT	POSITION	WIRE
2012	1	INDOOR OUTLETS	20A	500W	A	1500W	25A	HEATER	2	202
203	3	OUTDOOR OUTLETS	20A	500W	B	1500W		HEATER	4	204
205	5	PLC PANEL	20A	500W	C	100W	15A	EXHAUST FAN	6	206
207	7	SPARE	NA	0	A	0	NA	SPARE	8	208
209	9	SPARE	NA	0	B	0	NA	SPARE	10	210
211	11	SPARE	NA	0	C	0	NA	SPARE	12	212
213	13	SPARE	NA	0	A	0	NA	SPARE	14	214
215	15	SPARE	NA	0	B	0	NA	SPARE	16	216
217	17	SPARE	NA	0	C	0	NA	SPARE	18	218

REGISTERED PROFESSIONAL ENGINEER
56560PE
OREGON
JULY 9, 2011
JAMES G. PALLC

EXPIRATION DATE: 12/31/12

Civil West Engineering Services, Inc.
541-266-8601
www.civilwest.com
486 E Street
Coos Bay, Oregon 97420

REV.	DATE	DESCRIPTION	BY

Designed By: JBH | Drawn By: JBH | Checked By: JGP
File: BASE MAP | Project No: 1202-022

CITY OF COOS BAY
500 CENTRAL AVENUE

PUMP STATION NO. 4
REPLACEMENT

ELECTRICAL DISTRIBUTION PANELS

Date: 1/29/2011 | Sheet No: E4

NOTES:

1. IN NORMAL WATER OPERATING RANGE MOTOR DRIVES RECEIVE LOW SIGNAL INTO PURGE INPUT. IF EMERGENCY FLOATS ARE REACHED SIGNAL CHANGES TO HIGH AND MANUALLY RUNS DRIVES

2. DIS (DISABLE) IS PROVIDED TO ALLOW PLC TO MANUALLY OVERRIDE EMERGENCY FLOATS FOR TESTING AND FORCEMAIN CLEANING.

3. THE DRIVE DISABLE REMOVES THE DRIVE OPERATING JUMPER AND CONNECTS TO TWO RELAYS. THE LWA (LOW WATER ALARM) RELAYS WILL REMOVE THE SIGNAL AND STOP PUMPS. HIGH WATER ALARMS (P3I) ARE USED TO OVERRIDE IF THERE IS A CONFLICT BETWEEN FLOATS AND RESTART THE PUMPS.

4. LATCHING RELAYS, PUMP CONTROLLERS, OR TWO RELAYS CONNECTED TO LATCH ARE UTILIZED TO OPERATE THE PUMPS ON EMERGENCY FLOATS, AND PROVIDE A COMPLETE WETWELL PUMP DOWN BEFORE REMOVING POWER TO PUMPS.

5. NORMALLY CLOSED OR NORMALLY OPEN RELAYS ARE SYNCHRONISED WITH THE NORMALLY OPEN OR NORMALLY CLOSED CONTACT ON THE FLOAT SWITCHES. CERTAIN FLOATS ARE CONFIGURED TO DEFAULT TO A CERTAIN POSITION TO PROTECT STATION IF A COMPONENT BECOMES DEFECTIVE OR CABLE LOSES POWER. CHANGES MUST BE APPROVED BY ENGINEER.

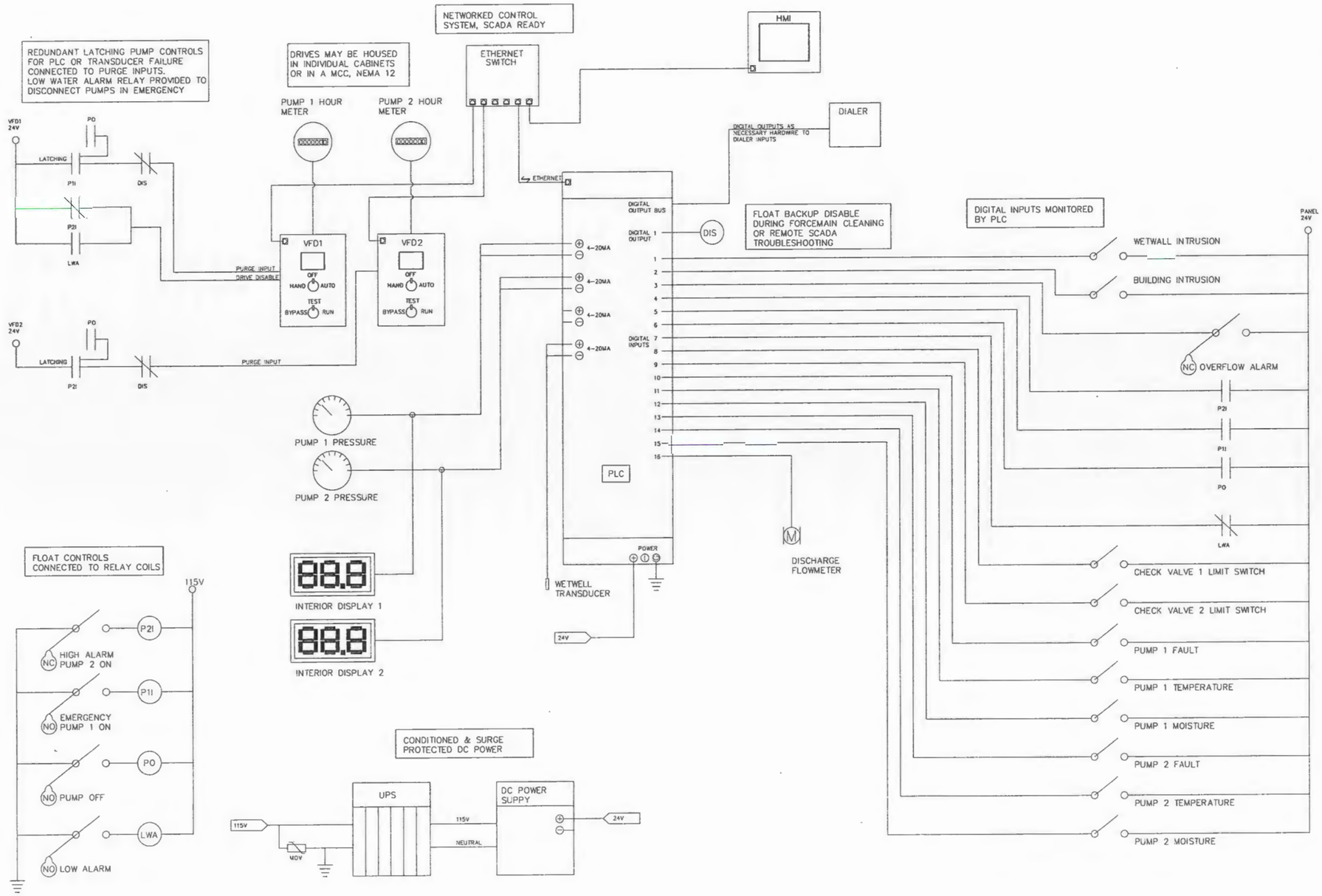

REGISTERED PROFESSIONAL ENGINEER 58560PE OREGON JULY 9 2001 JAMES G. PALLO

EXPIRATION DATE: 12/31/12

Civil West Engineering Services, Inc.
541-266-8601
www.civilwest.com
486 E Street
Coos Bay, Oregon 97420

REV.	DATE	DESCRIPTION	BY

Designed By: JBH
Drawn By: JBH
Checked By: JGP
File: BASE MAP
Project No. 1202-022

CITY OF COOS BAY
500 CENTRAL AVENUE

PUMP STATION NO. 4 REPLACEMENT

CONTROLS SCHEMATIC

Sheet No. E5

Date 1/23/2011

28 of 28